NEK
Nuklearna elektrarna Krško
Vrbina 12
8270 Krško

KRŠKO NUCLEAR POWER PLANT

TECHNICAL SPECIFICATION
For the Turn-Key Project Modification
1194-AM-L

AMSAC REPLACEMENT

SP-F3021

Rev. 1, July 2020

AUGMENTED QUALITY

Prepared by: (Responsible Engineer)	D. Cicvarić	Date: 15/7/2020
Reviewed by: (I&C)	D. Gabor, A. Beširević, M. Habinc	Date: 16/07/2020
Reviewed by: (ESD PI)	S. Fuks, D. Vehovar	Date: 17/07/2020
Reviewed by: (System Engineer)	M. Valjak	Date: 21/7/2020
Reviewed by: (QA Engineer)	N. Sorić	Date: 16/07/2020
Approved by: (E&DC Superintendent)	J. Cerjak	Date: 21/07/2020

RECORD OF REVISIONS

Rev. No.	Date	Reason for Revision and Revision Summary	Affected Pages
0	29.04.2020	Initial issue	N/A
1	15.07.2020	New AMSAC cabinets shall be delivered (removed option to reuse the existing cabinets), some additional details for spare parts and EMC are provided.	Multiple pages

TABLE OF CONTENTS

1. BACKGROUND AND DESCRIPTION OF THE PROBLEM 4
2. DEFINITIONS AND ABBREVIATIONS 5
3. SCOPE OF SERVICES AND DELIVERY 9
4. SAFETY CLASSIFICATION OF THE CONTRACTED WORK 17
5. DESIGN INPUTS AND REQUIREMENTS 18
6. APPLICABE NEK-CONTRACTOR DESIGN CONTROL PROGRAM 30
7. APPLICABLE CODES, STANDARDS, AND DESIGN CRITERIA 32
8. IDENTIFICATION OF THE AFFECTED SYSTEMS 34
9. IDENTIFICATION OF THE AFFECTED EQUIPMENT 34
10. SUPPLEMENTAL DATA 34
11. DOCUMENTS SUBMITTAL 35
12. PERFORMANCE REQUIREMENTS 38
13. MATERIAL REQUIREMENTS 39
14. FABRICATION AND ASSEMBLY REQUIREMENTS 39
15. INSPECTIONS AND TESTS 40
16. ITEM QUALIFICATIONS 42
17. SPECIAL REQUIREMETS 44
18. CLEANLINESS 44
19. CORROSION PROTECTION/COATING AND PAINTING 44
20. MARKING AND IDENTIFICATION 45
21. PACKAGING, HANDLING AND STORAGE 45
22. NON-CONFORMING MATERIALS 46
23. SPECIAL HANDLING 46
24. SHELF AND SERVICE LIFE 46
25. 10CFR21 REPORTING 46
26. COMMERCIAL GRADE DEDICATION 46
27. CONTRACTOR DOCUMENTATION REQUIREMENTS 46
28. REPAIR RECORDS 46
29. SOURCE INSPECTION/SURVEILLANCE NOTIFICATION 47
30. SHIPPING REQUIREMENTS 47
31. VENDOR TECHNICAL MANUAL AND REGISTERED UPDATES 47
32. TRAINING 47
33. REVIEW AND/OR VERIFICATION OF THE WORK 49
34. SCHEDULE REQUIREMENTS 49
35. STATUS REPORTING REQUIREMENTS 50
36. WORK OR INFORMATION TO BE PROVIDED BY NEK 50
37. CHANGES OF THE WORK SCOPE 50
38. RECORDS 51
39. ORGANIZATIONAL CONTACT 51
40. CONTRACTOR'S TECHNICAL APPROACH TO THE WORK 51
41. ACCESS TO THE CONTRACTOR'S FACILITIES AND DOCUMENTS 51
42. SUBCONTRACTED WORK 52
43. QUALITY ASSURANCE PROGRAM REQUIREMENTS 53
44. NEK PROPRIETARY DATA 56
45. APPENDIXES 56

1. BACKGROUND AND DESCRIPTION OF THE PROBLEM

1.1 General Background

ATWS Mitigation System Actuation Circuitry (AMSAC) system provides an alternate means (from the Primary Protection System) for tripping the turbine and initiating auxiliary feedwater flow. The system was developed, in response to a Nuclear Regulatory Commission requirement, to prevent excessive reactor coolant system pressure after an Anticipated Transient Without Scram (ATWS) event.

The existing Westinghouse AMSAC system performs these mitigative functions by monitoring secondary side process parameters, comparing these inputs against setpoints, executing coincidence logic and providing isolated outputs for interfacing with the existing turbine trip and auxiliary feedwater circuits. Beside these main actions, the AMSAC also performs secondary functions such as Steam Generator blowdown and sample isolation and steam dump capability limitation.

The existing NEK AMSAC logic is based on the Westinghouse Distribution Processing Family (WDPF) platform which became officially retired by the vendor.

Since no spare parts can be purchased, NEK decided to replace the whole processing (Non-Safety Related) part of the system (CAP 2014-2762).

Conceptual Design Package (CDP 1194-AM-L) for modification has been prepared and approved by NEK.

Scope of the proposed modification is replacement of the obsolete WDPF equipment located in the MCR AMSAC cabinet with a front bay and a rear bay (CB103RCKK808 - Train A and CB103RCKK809 - Train B), while keeping existing external interfaces and preserving existing actuation logic. New equipment shall be delivered with the new cabinets that shall be installed in the same MCR location having the same footprint.

The Class 1E relays mounted in the two separate wall mounted enclosures called Class 1E relay boxes shall not be replaced.

New AMSAC system shall remain stand-alone without integration into the existing NEK process computer networks.

System redundancy (two trains) as well as internal redundancy (within each train) shall be preserved to improve system reliability and prevent spurious AMSAC actuations caused by single failures.

The CONTRACTOR's scope of services is defined on a "TURN-KEY" project base designated as modification package 1194-AM-L, that shall provide NEK with a new AMSAC system including removal of the old system.

For the purposes of this specification, NEK will refer to Nuklearna Elektrarna Krško (Krško Nuclear Power Plant) as a purchaser, and CONTRACTOR will refer to the primary contractor using this specification to prepare a Bid for the supply of the equipment requested herein.

Terms should, shall and must are all used in describing mandatory requirements in this document.

2. DEFINITIONS AND ABBREVIATIONS

2.1 Definitions

AUGMENTED QUALITY (AQ): The term used in procurement process of Non Safety Related equipment, parts or services, when special quality requirements exist that demand higher quality requirements than usual for similar kind of equipment, parts and services. Augmented Quality as a term can be applied to any equipment, part or service item classified as Non Safety Related that has special requirements imposed by NEK (seismic, tests, analysis reports, commercial QA program, manufacturing and inspection plan, etc.). Augmented Quality determination is applicable for all equipment, parts and services items that are specific for NEK, complex, or are important for availability and reliability of the plant operation. Refer to the section 16 of this specification for details.

COMMON CAUSE FAILURES: Failures of equipment or systems that occur as a consequence of the same cause. The term is usually used with reference to redundant equipment or systems or to uses of identical equipment in multiple systems. Common cause failures can occur due to design, operational, environmental, or human factor initiators. Common cause failures in redundant systems compromise safety in the failures are concurrent failures, that is, failures which occur over a time interval during which it is not possible that the failures would be corrected.

COMMON MODE FAILURE: A failure of a system caused by an unknown design or manufacturing fault in a hardware or software module in such way that by a triggering by an internal or external event all modules of this type fail at the same time. Redundancy by identical means may be a suitable countermeasure against common mode failure, only if by additional design measures, the effect of possible events is reduced to one channel of the system. Random common cause failures are equivalent to a single failure.

DETAILED SOFTWARE FUNCTIONAL SPECIFICATION (DSFS): One of the design documents in the software life cycle of PCS that defines detailed functional characteristics of the PCS software not specifically related to the particular HW and/or SW platform. DSFS document should be developed for each PCS application (including all types of programmable digital devices) or for each application software package. Minimum requirement is that DSFS document should cover functional characteristics of the software functionality: input signals (scope, source, type, and accuracy), algorithms (including input signals, constants, and operator entered values), output signals (scope, type, intended usage, accuracy) and HSI. It is also good practice that the DSFS document states the main or top-level acceptance criteria. DSFS prepared for more complex PCS' also addresses other functional characteristics like reliability, robustness, safety, security, timing, data communication protocols and other.

DIVERSITY: The existence of the two or more different and independent ways or means of achieving a specified objective. Diversity is specifically provided as a defense against common mode failure. It may be achieved by providing systems that are physically different from each other, or by functional diversity, where systems achieve the specified objective by offering different treatments, based on the different measures.

ELECTROMAGNETIC COMPATIBILITY (EMC): The ability of the equipment to function satisfactorily in its electromagnetic environment without introducing intolerable disturbances to that environment or other equipment.

ELECTROMAGNETIC INTERFERENCE (EMI): Electromagnetic disturbance that manifests itself in the performance degradation, malfunction, or failure of electrical or electronic equipment.

FIRMWARE: Firmware is a program intended for use in programmable digital device. Firmware is kept in the semi-permanent storage such as various types of read-only memories. Firmware is used in conjunction with hardware and software, sharing the characteristics of both.

HUMAN-SYSTEM INTERFACE (HSI): The system through which the operating or maintenance staff interacts with the plant system, or the features through which user, administrator or maintenance staff interacts with the process computer system.

PROCESS COMPUTERS: Computers used to control real time processes, to monitor, log, distribute or simulate process data. Computers that collect data, perform calculations on the basis of predefined algorithms, store, transmit to other location and present to users data that originate from technological processes or environment. Process computer systems manipulate either data that are acquired in real time or data that have been retrieved and collected earlier. The term process computers used in this document cover large variety of digital devices, from digital devices programmed in firmware and PLCs to mainframe computers and networks of process computers. Process computer systems are used for technological process protection, technological process control, monitoring, data logging, simulations of technological processes and transmission of process data to remote locations.

PROGRAMMABLE LOGIC CONTROLLER (PLC): Programmable Logic Controller is a digital device ("similar to PROCESS COMPUTER") designed and used for automatic process control on the basis of predefined, preprogrammed and preloaded control algorithms which function on the basis of very strictly defined sequential logic scheme.

PROCESS INFORMATION SYSTEM (PIS): Process Information System is a common description for all the hardware (data acquisition systems, computer, and network equipment) and software used for the process data acquisition, distribution, data processing and presentation used as support for monitoring of the plant safe and reliable operation.

REDUNDANCY: Provision of more than the minimum number of (identical or diverse) elements or systems with the goal to avoid the loss of the required function so that the loss of elements or systems according to the required failure tolerance does not result in the loss of the required function as a whole. The provision of alternative (identical or diverse) equipment or systems so that anyone can perform the required function, regardless of the state of operation or failure of any other.

SOFTWARE DESIGN SPECIFICATION (SDS): One of the design documents that is prepared during the software life cycle as a last descriptive document before actual program coding starts. SDS is a bridge between DSFS document (that is usually written by a process technology specialist) and software code, which is written by programmers. SDS presents compilation of the DSFS document to the actual hardware configuration and software environment (software development platform, operating system, existing subroutines and databases, programming languages). SDS should be written by experienced software developer, who is familiar with the HW&SW platform planed for the end user usage. SDS should provide clear information and guidance to programmers how to implement functional characteristics stated in the DSFS document within specific HW&SW platform.

SOFTWARE REQUIREMENTS SPECIFICATION (SRS): One of the design documents that is prepared at the beginning of the software life cycle of PCS (usually the first document). SRS defines functional requirements for the PCS software that are related to: design requirements (documentation and processes), interface requirements and performance requirements. NRC guidance for the preparation of the SRS documents for digital computer software used in safety systems of NPP is provided in the NRC RG 1.172.

2.2 Abbreviations

A/D	Analog to Digital
AFW	Auxiliary Feedwater
ALB	Annunciator Light Box
AMSAC	ATWS Mitigation System Actuation Circuitry

AQ	Augmented Quality
ATWS	Anticipated Transients Without Scram
BPLB	Bypass-Permissive & Actuation Light Box
CAP	Corrective Action Program
CB	Control Building
CDA	Critical Digital Asset
CDP	Conceptual Design Package
CFR	Code of Federal Regulations
CoC	Certificate of Compliance
D/A	Digital to Analog
DAP	Delivery at Place
DCM	Document Control Module
DCS	Distributed Control System
DI	Design Inputs
DIW	Document Information Worksheet
DMP	Design Modification Package
DPU	Distributed Processing Unit
DSFS	Detailed Software Functional Specification
DUR	Document Update Record
E&DC	Engineering and Design Changes
EMC	Electromagnetic Compatibility
EMI	Electromagnetic Interference
ESD	Engineering Services Division
ESFAS	Engineered Safety Features Actuation System
FAT	Factory Acceptance Tests
FDCR	Field Design Change Request
FO	Fiber Optic
HSI	Human-System Interface
HW	Hardware
I&C	Instrumentation and Control
IEEE	Institute of Electrical and Electronics Engineers
I/O	Input/Output
IP	Installation Package
KFSS	Krško Full Scope Simulator
MCB	Main Control Board
MCR	Main Control Room
MECL	Master Equipment Component List
MSDS	Materials Safety Data Sheets

N/A	Not Applicable
NC	Normally Closed
NCR	Non-Conformance Report
NEK	Nukleama Elektrama KRŠKO (Krško NPP)
NR	Narrow Range
NO	Normally Open
NPP	Nuclear Power Plant
NRC	United States Nuclear Regulatory Commission
NSR	Non Safety Related
OSP	Operating Surveillance Test Procedures
PCS	Process Computer Systems
PDR	Problem or Deficiency Report
PI	Process Information Systems
PIS	Plant Information System
PLC	Programmable Logic Controller
PMM	Project Management Manual
PQP	Project Quality Plan
QA	Quality Assurance
QC	Quality Control
QRP	Quality Record Package
RE	Responsible Engineer
RPS	Reactor Protection System
RTS	Reactor Trip System
SAT	Site Acceptance Tests
SDS	Software Design Specification
SE	Safety Evaluation
SES	Safety Evaluation Screening
SG	Steam Generator
SR	Nuclear Safety Related
SRS	Software Requirements Specification
SSPS	Solid State Protection System
SUP	Startup Procedure
SW	Software
TOP	Turn-Over Package
TSLB	Trip Status Light Box
UCP	USAR Change Package
USAR	Updated Safety Analyses Report
WDPF	Westinghouse Distribution Processing Family

3. SCOPE OF SERVICES AND DELIVERY

3.1 General

3.1.1 This project shall be performed on a “TURN-KEY” base and marked as modification package 1194-AM-L. Consequently, all activities related to the equipment and associated services to provide a fully functional new AMSAC system and documentation, including removal of the old system, shall be covered by CONTRACTOR or by its subcontracting parties.

3.1.2 Scope of the proposed modification is replacement of the obsolete WDPF equipment located in the two MCR AMSAC cabinets (CB103RCKK808 - Train A and CB103RCKK809 - Train B), as seen in Figure 1, while keeping existing external interfaces. New equipment shall be delivered with the new cabinets (back-to-back arrangement) to be installed in the same MCR location having the same footprint. See Appendix 6 of this specification for cabinets' footprint details.

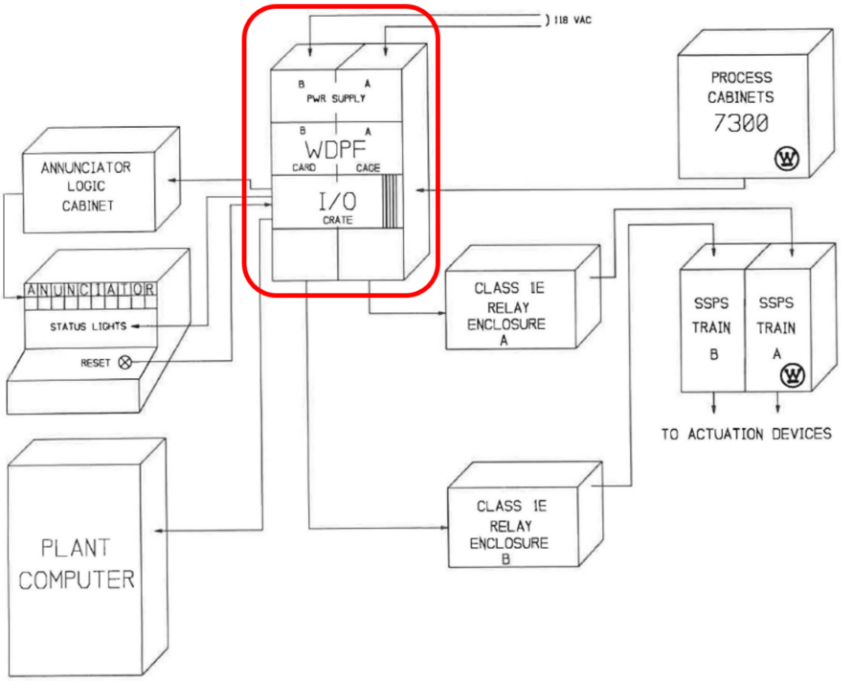

Figure 1: AMSAC system interface

3.1.3 The Class 1E relays mounted in two separate wall mounted enclosures called Class 1E relay boxes EE106PNLK106 and EE106PNLK306 (located in CB, elevation 107) shall not be replaced.

3.1.4 Whole AMSAC system redundancy (Train A and Train B) shall be retained as well as internal redundancy within each train with active and hot stand-by processors and redundant output modules.

3.1.5 Power source independence for each train shall be retained.

3.1.6 Main Control Room operators' HSI interface shall not be changed.

3.1.7 AMSAC activation logic as seen in Figure 2 and referenced drawings in Appendix 1 of this specification, as well as basic operation, control and test principles shall be retained.

3.1.8 Nothing shall relieve the CONTRACTOR of the responsibility to perform, in addition to the established scope, analyses, tests, inspections, erection, startup and other activities that through the process become necessary to ensure that the AMSAC system design shall assure intended system service.

3.1.9 New AMSAC system shall remain stand-alone, without integration into the existing NEK process computer networks.

3.1.10 New AMSAC system with associated equipment installation and commissioning is scheduled to be finished during the 10-day window in the Outage 2022 (October).

3.1.11 The CONTRACTOR shall be responsible for compliance with the all detailed requirements of this specification and its referenced documents. Revisions requested by NEK, and accepted by the CONTRACTOR shall not in no way relieve the CONTRACTOR from its responsibilities. There shall be no deviation from this specification or its references without prior written authorization by NEK.

3.1.12 Licenses for all software/firmware necessary for setup, operation, surveillance and testing of the AMSAC system shall be provided to NEK together with all accompanying hardware.

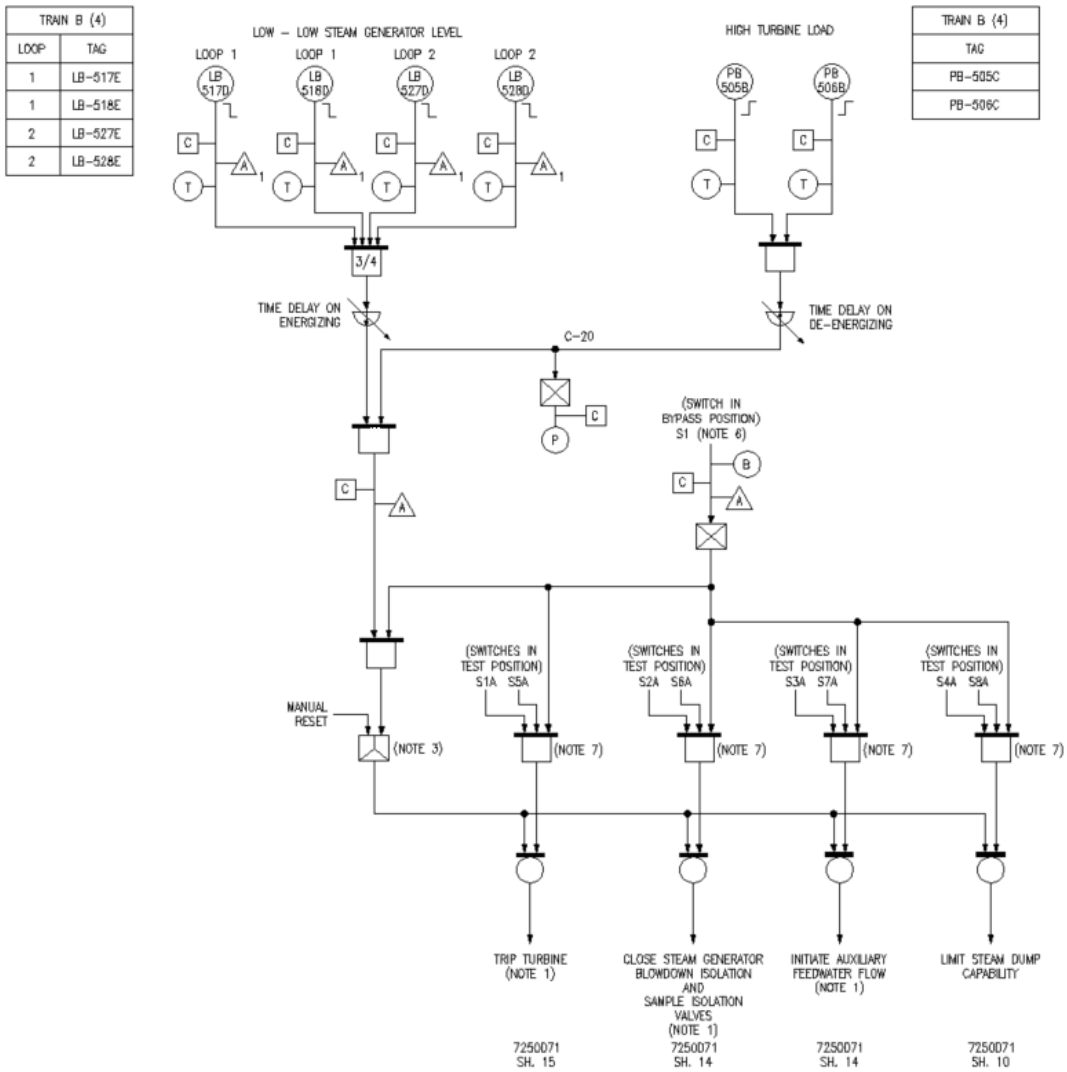

Figure 2: AMSAC system actuation logic

3.2 The CONTRACTOR's scope of work and deliverables

3.2.1 The CONTRACTOR's scope of services is defined as a “TURN-KEY” project that encompass all required analysis, design engineering work, civil work, material procurement, manufacturing, transportation including on the site unloading, installation/erection and required system testing activities necessary to perform design and successfully erect the new AMSAC system on the NEK site. The scope of services in this “TURN-KEY” project shall be completed physically and functionally in a way which will achieve and meet all performance criteria proposed by the CONTRACTOR and accepted by NEK including other requirements of this specification and documentation referenced by it.

3.2.2 The CONTRACTOR shall perform the necessary reviews to assure that the supplied items will comply with all interface requirements of the existing NEK plant system and components, as mentioned in this specification. All technical solutions required for a safe, reliable and efficient operation of the new AMSAC system shall be considered and provided.

3.2.3 Mandatory detailed walk-downs shall be performed by CONTRACTOR and its subcontractors. The main purpose of the detailed walk-down for the project is to ensure the design inputs for adequate and feasible technical solution. If during that walk-down or during the DMP development any discrepancies are found between actual as-built status in the field and existing NEK documentation or if appropriate as-built documentation does not exist at all, it is CONTRACTOR's obligation to prepare needed correct As-Built documentation for development of the Design Modification Package. As a consequence of this walk-down process and possible discrepancies found, CONTRACTOR and its subcontractors are requested to report found discrepancies to NEK, but they are not requested to correct NEK DCM documents and drawings. All findings shall be reported in walk-down report issued. Subject walk-down/as-built shall be performed prior to the development of the DMP. Walk-down shall be supported and continued with "in-office" engineering work that shall result with verified design input data in the form of verified As-Built drawings.

3.2.4 The CONTRACTOR shall analyze, design, manufacture, shop test, supply, install, wire, connect, site test, and commission the new completely operable AMSAC system, including cabinets and any support structures needed as well as adapters to integrate it with the rest of the AMSAC plant interfaces. The AMSAC system shall be completely integrated into the existing plant systems, complete with all features and accessories and fully functional in every aspect, as specified further in this Technical specification.

3.2.5 All necessary hardware and software changes shall be prepared and material delivered within the CONTRACTOR’s scope of supply, and according to the section 6.2 of this specification.

3.2.6 The CONTRACTOR shall dismantle and remove the existing AMSAC equipment to be replaced and move it to the agreed location within NEK.

3.2.7 It is CONTRACTOR's ultimate responsibility to select and purchase or manufacture proper equipment and components according to the NEK design inputs as specified in the section 5 of this specification.

3.2.8 All supplied parts and assembles shall be designed and manufactured according to the state-of-the-art technology with the goal to provide a service life of twenty (20) years or more. The CONTRACTOR shall provide all necessary design features and reports to fulfill requirements for design life of at least twenty (20) years. This shall not constitute a warranty for design life.

3.2.9 All deliverables shall be new.

3.2.10 The CONTRACTOR shall attend periodic technical and management meetings, notify NEK of any project contractual scope changes, assure personnel indoctrination to NEK procedures and provide: periodic project status reports, reproduction services of drawings and documents if requested, project planning and scheduling efforts, project management, quality assurance program implementation including instituting a corrective action program, interfaces with equipment vendors to obtain necessary vendor data and drawing information to coordinate with CONTRACTOR's furnished designs, qualification report reviews, and other specialty tasks identified as part of the work effort.

3.2.11 Engineering and design activities

a) Engineering and Design includes all the activities required for preparation of necessary project documentation for the new AMSAC system project at NEK following NEK ESD Procedures, NEK QA Manual, USAR, Codes and Standards specified by NEK or proposed by the CONTRACTOR and approved for use by NEK. The codes and standards are specified under section 7 of this specification.

b) The CONTRACTOR shall be responsible for compliance with all of the detailed requirements of this specification. Approval of any drawings, and/or specifications by NEK shall in no way relieve the CONTRACTOR from these responsibilities. There shall be no deviation from this specification or its references without prior written approval by NEK.

c) New AMSAC system shall comply with all applicable regulatory requirements.

d) The CONTRACTOR's engineering and design services shall include:

1. Identifying and evaluating the "as-found" condition of equipment and commodities. Any concerns relating to the findings must be reported to NEK.
2. Review of vendor and other NEK drawings and documents for compliance to the specification and Contract documents requirements. Assuring that the appropriate parameters and design information is being used by all parties.
3. Perform all necessary engineering, design and supporting calculation activities necessary to develop the detail design modification packages.
4. Identify design information that will be used during the project and assure that engineering activities are performed with a consistent set of assumptions and data.
5. Perform detailed site walk-downs and evaluation of current as-built conditions in support of the detail engineering and design effort.
6. Provide technical overview of the design and review engineering documents for consistency with the project documents requirements.
7. Review of vendor qualifications, quality data, equipment drawings, reports and data.
8. AMSAC system interfaces necessities (AC power, etc.) shall comply with design inputs specified in the section 5 of this specification.
9. Development of the PMM and PQP documents for the NEK AMSAC system project as additionally requested/explained in the sections 11.3, 11.4 and 43, as well as Appendix 2 of this specification.
10. Development of the Design Modification Package (DMP) per NEK ESP-2.602 procedure for the new AMSAC system, associated equipment, existing equipment demolition, new equipment installation and commissioning. DMP shall have from NEK assigned number 1194-AM-L.

11. The CONTRACTOR shall assure that all engineering has been completed, meets the licensing and basic engineering requirements, utilize the appropriate design inputs and satisfies the project requirements.
12. Preparations of required licensing documentation as required by NEK procedure ESP-2.303 (see section 6.2 of this specification) and provide assistance to NEK with development of the licensing information and its presentations to the licensing authorities.
13. Assurance that required equipment data will be provided and be consistent with the equipment specification requirements and interfaces.
14. The CONTRACTOR shall attend inspections and testing of major equipment during manufacturing.
15. The CONTRACTOR's project manager is responsible for overall indoctrination and indoctrination records keeping of the personnel assigned to the project, as well as the certification of the personnel's qualification to perform the work per this Contract (from this point forward named as Work).
16. The CONTRACTOR shall provide to NEK for all delivered and installed equipment per NEK AMSAC project at least:
    - spare parts and consumables (for at least 10 years of operation),
    - qualification reports,
    - drawings, purchasing specifications,
    - vendor manuals,
    - in storage and shelf life data,
    - seismic reports to prove seismic integrity of the new AMSAC cabinets and proper equipment fixation within cabinets.
17. The CONTRACTOR shall prepare all needed FAT and SAT procedures that shall be reviewed, commented and approved by NEK. Scope of the Site Acceptance Testing shall envelope full scope of FAT already performed at CONTRACTOR's facilities with the differences related to the full project configuration. SAT shall exercise full scope of AMSAC functional testing.
18. The CONTRACTOR shall provide AMSAC application software source code
19. The CONTRACTOR shall provide AMSAC Software Requirements Specification (SRS), Software Design Specification (SDS) and Detailed Software Functional Specification (DSFS).
20. The CONTRACTOR shall provide AMSAC programming and software verification and validation (V&V).
21. The CONTRACTOR shall provide detailed description of the AMSAC system principle of operation including calculation methodology, calibration methodology and validation methodology. Delivered documentation must be of sufficient detail in order to allow NEK personnel calculation of new process parameters, development of new process logic and updating of AMSAC process computers without external support. Delivered documentation shall also contain enough detail to support all NEK licensing efforts.
22. The CONTRACTOR shall provide users guides for operation, installation and configuration, as well as procedures for software maintenance, system security and administration.
23. Configuration and test software shall be licensed to NEK for the user's configuration management control and testing.

3.2.12 Site activities (demolition, installation, commissioning and testing)

a) Demolition, installation, commissioning and testing of equipment shall take place during the plant refueling outage in October 2022.

b) Site installation, equipment set up, and acceptance testing shall take no longer than 10 days following the equipment tag out.

c) The site installation shall be performed in accordance with the section 14.2 of this specification.

d) The CONTRACTOR shall remove the existing MCR AMSAC cabinets CB103RCKK808 and CB103RCKK809 and move them to the agreed location within NEK.

e) Per by CONTRACTOR developed 1194-AM-L DMP documentation package in accordance with ESP-2.602 procedure, the CONTRACTOR is responsible for overall AMSAC system installation.

f) The CONTRACTOR shall assemble, install and connect new cabinets with AMSAC equipment, lay down and connect all cables and wiring to the interfacing equipment, as necessary, including Class 1E relays, MCR control equipment and HSI, connections to the PIS, as well as carry out site inspections and acceptance tests during assembly, startup and initial operation of the AMSAC system.

g) The CONTRACTOR shall make all alterations, permanent or temporary, to the site installation location in order to be able to properly install the new AMSAC equipment.

h) The CONTRACTOR shall provide all necessary labor, supervision, tools, equipment, spare parts and consumables needed to successfully disassemble old equipment, as well as to reassemble and test new equipment on site, as applicable.

i) The CONTRACTOR shall prepare all necessary startup procedures in order to perform SAT and final equipment set up prior to the equipment initial operation and tests per revised NEK maintenance and surveillance procedures in accordance with the previously provided markups.

j) System startup will be performed jointly by the CONTRACTOR and NEK following the startup procedure (SUP) instructions prepared by the CONTRACTOR and approved by NEK.

k) CONTRACTOR's expert on-site assistance is mandatory during commissioning and testing phases after installation completion.

l) Same cabinets (only exterior; without processing electronics and special qualifications) containing Bypass/Operate switches as only foreseen operators' HSI changes shall be provided for the KFSS. Other modifications of the KFSS are not foreseen, provided that there will be no other operators' HSI or AMSAC functionality logic changes which would then become necessary to be implemented on the KFSS as well.

m) The CONTRACTOR's Installation and Testing services shall include:

NOTE: Installation documentation package(s) shall be provided and approved by NEK QA/QC and responsible RE before any demolition/installation work would be started by the CONTRACTOR!

1. Development of Installation Instruction Packages per NEK ESP-2.619 procedure in accordance with by the CONTRACTOR developed and approved 1194-AM-L DMP.
2. New AMSAC system installation, testing and finalization activities shall be timely scheduled and implemented by the CONTRACTOR not to jeopardize overall project implementation schedule. Detailed plan shall be prepared by the CONTRACTOR and shall be approved by NEK based on the Outage 2022 plan and project schedule as defined in the section 34 of this specification.
3. CONTRACTOR is fully responsible for overall AMSAC project coordination and finalization under coordination and direct supervision of the NEK representatives.
4. CONTRACTOR's site manager responsible for overall AMSAC project shall closely cooperate and coordinate activities with its subcontractors responsible for mechanical, I&C, electrical and civil portions of installation Work on this project. Any dissidence between the different parties shall be resolved and coordinated with the NEK RE.
5. CONTRACTOR's QA/QC department is responsible for overall quality delegated by this specification and 1194-AM-L DMP. Moreover, they shall closely cooperate with NEK QA representatives and NEK RE.
6. At the end of the project the CONTRACTOR shall develop detailed and accurate mark-up drawings and other updated documents that shall be incorporated into the TOP per NEK procedure ESP-2.611.
7. AMSAC system operability checklist shall be signed by the CONTRACTOR representative(s) and NEK project team including RE and QA/QC personnel upon completion of all demolition/installation activities and system operationally test verification.
8. A final walk-down and accuracy verification of by the CONTRACTOR developed mark-up documents/drawings shall be performed.
9. If necessary, CONTRACTOR's responsibility is to initiate, develop and implement by NEK approved FDCR(s) following instructions defined in the ESP-2.609 procedure.
10. CONTRACTOR's obligation is to develop final AMSAC project installation/commissioning report in accordance with the NEK ESP-2.619 procedure requirements.

3.2.13 <u>Packing, shipping and storage services</u>

a) The CONTRACTOR shall suitably pack, ship and deliver all equipment to the NEK site from the manufacturing facility, carry out unloading at the mutually agreed temporary storage location on the NEK property, and provide all necessary means, but storage building itself, for temporary storage. The CONTRACTOR shall also carry out all site transportation to the job location in the MCR.

b) The CONTRACTOR shall unpack, inspect for transportation damage, and perform any other activity necessary to fully prepare delivered equipment for installation.

3.2.14 Spare parts

a) Within the Bid, the CONTRACTOR shall deliver recommended spare parts for the equipment delivered, to cover at least ten (10) years of the system operation. Spare parts' unit pricing shall be provided.

b) As a minimum ten percent (10%) but no less than two (2) spares shall be delivered for all active subassemblies (DPUs, I/O modules, power supply units, PCB cards, etc.)

c) NEK will review the proposed recommended spare parts list and approve it or propose changes if any.

d) All parts (including spares) shall be provided with supplemental data such as item description, part number, serial number, manufacturer details, reference documents, shelf life and storage requirements, recommended replacement frequency, etc. in accordance with the NEK MECL data requirements.

e) If NEK decides to procure more spare parts than included in the contractually anticipated scope and pricing, additional spare parts could be procured on the basis of the scope change request issued by NEK.

f) Contacts for purchase of the spare parts in the future (via manufacturer or CONTRACTOR) shall be provided within the Bid.

g) The CONTRACTOR shall assure technical (software and hardware) support and spare parts for at least 20 years of operation after system delivery. Spare parts shall be provided with Certificate of Compliance to applicable qualification test reports and original purchase order / Contract. Changes of part numbers for spare parts have to be documented by supplier. The usage of different materials than used for production of the original parts must be supported by CONTRACOR's analysis of part critical characteristic. For any part number change, the CONTRACTOR shall issue an Engineering Equivalency Evaluation and deliver it to NEK.

3.2.15 Revision of the documentation and project closure

a) NEK will provide available design inputs per section 3.3.2 of this specification, however overall collection, validation and use of any required input data, no matter of data form, is fully the CONTRACTOR’s responsibility. NEK might not possess complete documentation of the existing equipment.

b) The CONTRACTOR shall provide all applicable documentation requested per this specification.

c) The CONTRACTOR shall make available all necessary field and inspection procedures, drawings and written instructions, as applicable for the project. This documentation shall be available for NEK review.

d) The CONTRACTOR shall fulfill NEK Design Modification Control Program requirements, which define how to prepare documentation packages, process, and control modifications and design changes to the NEK structures, systems and components through three major phases, i.e. design, installation and closure.

e) Revision of the documentation and project closure shall include the following CONTRACTOR activities:

1. Development of the DMP package for NEK review and final issue for construction
2. As-built update of the DCM
3. As-built update of the MECL

4. Test and maintenance (based on the new system architecture) as well as alarm response (based on the new alarm origins, alarm causes and required operator actions) procedures change markups
5. Update of the original documents (drawings, calculations, design criteria, etc.)
6. Preparation of the TOP and project closeout per NEK procedure ESP-2.611
7. USAR change package (based on the new system architecture)
8. Revision/development of the System Design Description

3.2.16 Training

a) The CONTRACTOR shall provide one (1) session of the classroom and one (1) session of the on-the-job training for NEK technical stuff of sufficient duration to provide complete end user operation and maintenance program. Full training for at least six (6) persons shall be included in the Contract scope.

b) The CONTRACTOR shall provide training materials to cover principles of the system operation and system interfaces for the NEK MCR licensed operators. Operators' training itself will be carried out by the NEK personnel.

c) For details refer to the section 32 of this specification.

3.3 Equipment, material and services to be furnished by NEK

3.3.1 NEK will provide the overall project coordination and management. Coordination includes communication with the CONTRACTOR, NEK Technical Operations, maintenance and outage planners.

3.3.2 NEK will provide all available design-related inputs necessary to support CONTRACTOR's scope of Work; however, this information is limited to documentation available within the NEK document control module (DCM). Available documents may be subjected to the protection of the proprietary information.

3.3.3 NEK will ensure all internal reviews and approvals required herein.

3.3.4 NEK will provide an on-site training to all CONTRACTOR's and its subcontractor's employees, as needed, to meet requirements for an "unescorted access" to perform the on-site activities.

3.3.5 NEK shall ensure that all sources of energy inputs are removed for the purpose of dismantling the existing components.

3.3.6 All necessary software changes to the Plant Information System (PIS) HSI in the MCR and at the NEK full scope simulator shall be accomplished by NEK.

4. SAFETY CLASSIFICATION OF THE CONTRACTED WORK

4.1 The contracted work is classified as Non-Safety Related since only the NSR part of the AMSAC system (two MCR cabinets CB103RCKK808 - Train A and CB103RCKK809 - Train B containing processing electronics) shall be replaced. New cabinets shall be delivered.

4.2 AMSAC system is required per 10CFR50.62 "Requirements for reduction of risk from anticipated transients without scram (ATWS) events for light-water-cooled nuclear power plants". As stated in the NRC final rule 10CFR50.62, the ATWS equipment is not required to be safety related, but the implementation of AMSAC must be such that the existing protection system continues to meet all applicable safety related criteria. Hence the project

is declared as a Quality Related i.e. Augmented Quality activity therefore, Quality requirements specified in this specification shall be followed and fulfilled throughout the whole project.

5. DESIGN INPUTS AND REQUIREMENTS

5.1 General

5.1.1 Anticipated Transients Without Scram (ATWS) were first raised as a safety concern in the early 1970s in an Advisory Committee for Reactor Safety technical paper that dealt with common mode failure. The worst common mode failure considered was failure to scram the reactor after an anticipated transient. The NRC final rule, 10CFR50.62, approved in 1983, required Westinghouse plants to have ATWS mitigation equipment independent of the Reactor Trip System that would initiate turbine trip after 30 seconds and auxiliary feedwater flow actuation 60 seconds after the initiating event.

5.1.2 As stated in the NRC final rule, the ATWS equipment is not required to be safety related, but the implementation of AMSAC must be such that the existing protection system continues to meet all applicable safety related criteria. AMSAC uses either isolated inputs from the RPS or inputs independent of the RPS, and provides isolated outputs to the safety related final actuating devices. These isolation devices ensure that the existing protection system continues to meet all applicable safety criteria and that the circuitry for the necessary actions is protected.

5.1.3 The basis for diversity of the ATWS mitigation system from the RTS is to minimize the potential of common mode failures. Existing sensors may be used as well as the sensor power supplies and isolators. The diversity is required from sensor output to, but not including, the final actuation device. The AMSAC design shall be based on the microprocessor-based system, while the RTS utilizes an analog-based process protection system and a discrete component logic system. Through the different types of technologies (analog versus digital), diversity shall be fulfilled.

5.1.4 AMSAC needs to be physically separated from the existing protection system hardware. This requires that the cable routing be independent of protection system cable routing and the location of the ATWS equipment cabinets in such a place that there is no interaction with the protection set cabinets. The AMSAC actuation outputs to the redundant turbine trip and auxiliary feedwater pump circuits are separated by each being provided from separate Class 1E relay boxes. Each of the redundant trains of the AMSAC shall be housed in a single bay cabinet.

5.1.5 The non-safety related ATWS circuitry shall be manually testable with the plant on-line by switching one train to bypass mode. Testing of the outputs to the final actuation devices may be performed with the plant shutdown. Once in bypass mode, all output relays of the related Class 1E relay box are disabled. An AMSAC train shall be testable for maintenance purpose by injecting manually input signals and monitoring system response at various stages of the processing within the train. Switches shall be provided for each output relay to perform testing of AMSAC outputs through to the final actuation devices with the plant shutdown.

5.1.6 AMSAC outputs from each train shall be implemented using redundant outputs from two different output modules combined in an "OR/AND" configuration to actuate Class 1 E relays.

5.1.7 One of the design goals of the AMSAC is to prevent spurious actuations and provide high reliability utilizing 3/4 actuation logic, combination of redundant outputs, time delays, lower setpoints than used by the RPS and power level block interlock. This helps ensure that the AMSAC will not adversely impact plant availability. The variable delay timer (set to 15 seconds in NEK) allows the RTS to actuate appropriate actions before AMSAC.

5.1.8 Existing NEK AMSAC system uses steam generator water narrow level signals to detect a loss of secondary heat sink and initiate the mitigative functions: turbine trip, auxiliary feed water start, steam generator blowdown and sampling lines isolation and steam dump limitation.

5.1.9 Two level signals for each steam generator shall be selected for performing the AMSAC actuation logic. Actuation of the AMSAC occurs on coincidence of 3 out of 4 low water level signals (below 8%) in the steam generators, using existing transmitters. This water level is slightly less than the LO-LO steam generator level (13%) used by the protection system to trip the reactor. Such coincidence logic shall be applied to minimize the possibility of spurious actuations of the system.

5.1.10 The AMSAC actuation signal shall be blocked below a level of 40% power, coming from two turbine impulse pressure signals. The automatic block of the AMSAC is defeated on two out of two turbine load signals being above predetermined setpoints and permits actuation of the turbine trip and auxiliary feedwater start circuits. Any of the turbine load signals below their setpoint (corresponding to 40%) block the AMSAC logic. This block is to ensure that spurious AMSAC actuations do not occur at low power operations and during startup.

5.1.11 In addition to tripping the turbine and starting auxiliary feedwater system, AMSAC shall limit the steam dump capability to 40% of nominal steam flow. This is accomplished by utilizing outputs from the AMSAC system to block air to the half of the condenser steam dump valves.

5.1.12 The steam generator blowdown and sampling line isolation valves shall also be closed when initiating auxiliary feed water flow. This is accomplished by AMSAC outputs in the isolation valve closure circuits.

5.1.13 All process signals (from 7300 I&C cabinets) shall be fed to the AMSAC cabinets via isolator cards.

5.1.14 There shall be no changes to the system operating logic or system protection functions due to the new equipment, as compared to the currently installed system. Logic and interface wirings can be seen on the attached drawings listed in the Appendix 1 of this specification.

5.1.15 Development of the design inputs is within the scope of the CONTRACTORS' work. All original design documents available at NEK along with the information provided in this specification shall be put at CONTRACTORS' disposal for review and use with respect to the proprietary policy. The design input document shall be prepared in accordance with the valid revision of the NEK procedure ESP-2.604. As a prerequisite for the DMP development a Design Input document shall be reviewed and approved by CONTRACTOR and NEK as purchaser.

5.1.16 Each design input shall be checked and verified by the CONTRACTOR vs. original design basis.

5.1.17 New AMSAC system shall adhere to the NEK USAR requirements, NEK uprate analyses and other applicable codes and standards as specified in the section 7.2 of this specification.

5.2 Operational requirements under various conditions

5.2.1 The AMSAC system is required to be operable when plant is above 40% of nominal power. To avoid spurious AMSAC actuation during starting at the lower power levels, AMSAC will be blocked at turbine loads less than 40%. In case of an ATWS event below 40% of nominal load, operator actions will be required to provide long-term core protection and ensuring adequate heat sink capability by initiating auxiliary feedwater flow, tripping the turbine, and isolating steam generator blowdown and sampling lines.

5.3 Redundancy, diversity and separation requirements

5.3.1 Per 10CFR50.62 AMSAC redundancy is not required. However, full train as well as internal redundancy within each train shall be retained (as in the existing system) to improve the reliability of the system and avoid unwanted spurious actuations in cases such as failures of an input channel, actuation logic processor, I/O card or output relay. The AMSAC system shall consist of the two fully redundant trains (Train A and Train B with corresponding Class 1E relay boxes). To improve plant availability and avoid unwanted spurious actuation, AMSAC outputs of each train shall remain to be implemented using redundant outputs from different output modules combined into an “OR/AND” configuration to actuate Class 1E relays as seen in Figure 3. Redundant microprocessor systems in each train (fault tolerant configuration) shall have the same program, one having control of the inputs and outputs and the other being in back-up mode. System shall perform self-diagnostic tests during each actuation cycle and report any failures based on comparison of processors’ inputs and outputs for consistency in each train. Train A and Train B shall perform identical functions based on the same set of inputs and controlling outputs on two different sets of relays. AMSAC Train A will interface with SSPS Train A and AMSAC Train B with SSPS Train B via the corresponding train related Class 1E relay boxes.

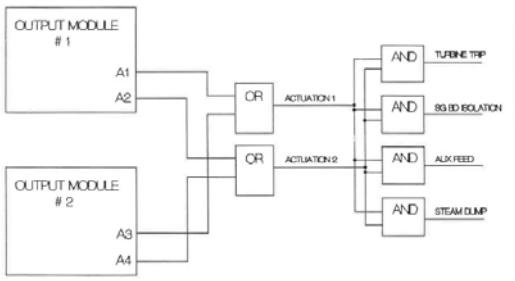

Figure 3: Output logic of each cabinet

5.3.2 Equipment diversity to the extent reasonable and practicable to minimize the potential for common cause failures is required from the sensors' outputs to, but not including, the final actuation devices. The sensors need not be of a diverse design or manufacture. Existing protection system instrument sensing lines, sensors, and sensor power supplies may be used. Electrical independence from the existing RPS is required from the sensor output to the final actuation device, at which point, non-safety related circuits must be isolated from safety related circuits. Signals from the RPS must be electrically isolated before being transmitted to the AMSAC. AMSAC outputs must be isolated prior to interfacing with safety related actuation circuits.

5.3.3 Physical separation between the trains shall be achieved by fitting each train in its own cabinet (back-to-back arrangement). This applies to strips of terminal blocks, location of subassemblies, AC and DC power cable routing and signal cable routing. Barrier shall be provided between field wiring area and processing area to act as improved EMI rejection. Redundant DPUs housed in the same cabinet shall be mechanically separated.

5.4 Instrumentation and control requirements

5.4.1 Signal conditioning boards shall provide surge protection, filtering and common-mode isolation.

5.4.2 AMSAC system will retain automatic actuation of intended functions based on the inputs from the following instrumentation channels:

- SG NR Level Loop 1: L-517
- SG NR Level Loop 1: L-518
- SG NR Level Loop 2: L-527
- SG NR Level Loop 2: L-528
- Turbine Impulse Pressure: P-505
- Turbine Impulse Pressure: P-506

5.5 AMSAC MCR cabinets (CB103RCKK808, CB103RCKK809)

NOTE: Physical and internal arrangement of the existing cabinets can be seen in Figure 4.

5.5.1 Existing AMSAC cabinets (back-to-back arrangement) are located in the Main Control Room in the Control Building at the elevation 115.55, next to the 7300 Process I&C cabinet, Protection Set 2.

5.5.2 New MCR AMSAC cabinets in back-to-back arrangement shall be delivered with the new AMSAC equipment after removal of the old cabinets.

5.5.3 Cable entry to the cabinets is form the bottom of the cabinets.

5.5.4 Available space for the new cabinets' installation is approximately: H: 223 cm (+10 cm stand), W: 68 cm, D: 45 cm (depth of each cabinet). New cabinets shall not reduce the walkways. Minimal gap of 50 mm between the new AMSAC cabinets and the existing MCR process protection system cabinets shall be preserved. Refer to the Appendix 6 for details.

5.5.5 A mounting frame is welded on the existing MCR steel embedment. The new AMSAC cabinets shall be fixed on this mounting frame in accordance with the seismic requirements specified in the section 5.30.

5.5.6 Single lockable swing door shall be installed on each cabinet.

5.5.7 Air input flow through the bottom vents and exhaust through the top vents shall be provided.

5.5.8 Fire barrier foam at the bottom of the cabinets (and any other fire barriers if breached) shall be restored in case of removal.

5.5.9 Existing fire detection system mounted at the top of each cabinet shall be preserved and reused in the new cabinets.

5.5.10 New AMSAC MCR cabinets shall maintain structural integrity (including proper equipment fixation within cabinets) during seismic event as specified in the Appendix 5 of this specification.

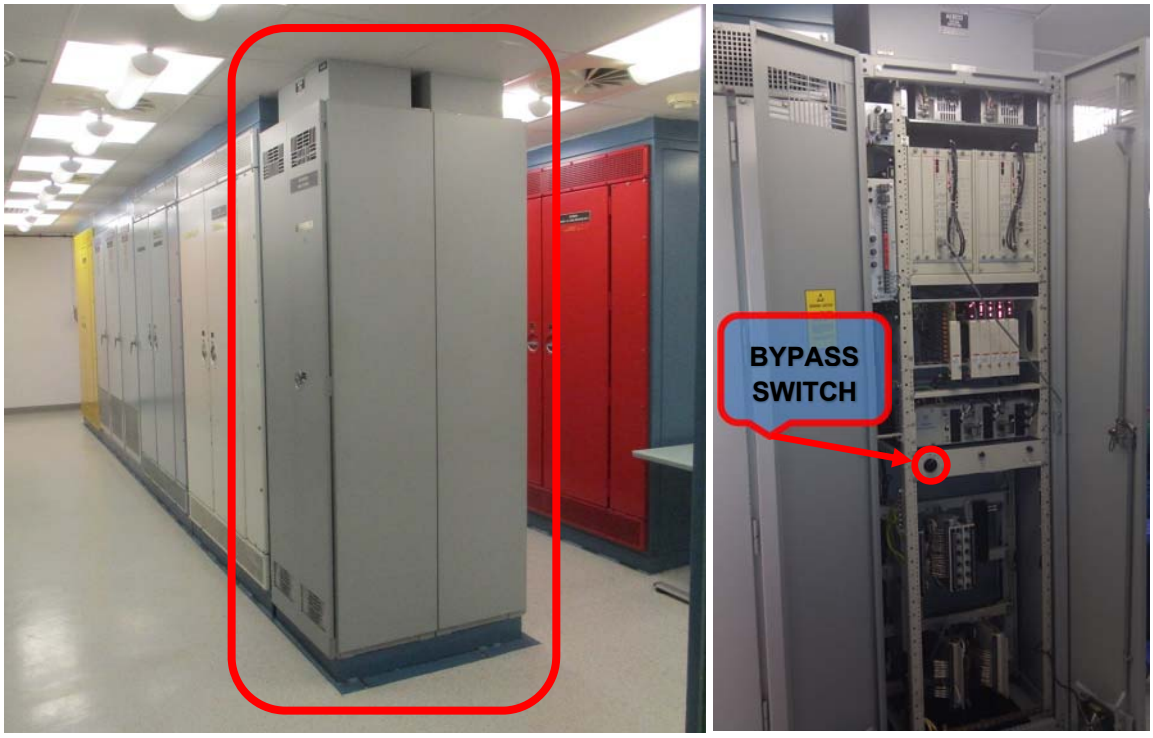

Figure 4: Existing MCR AMSAC cabinets location and internals of one cabinet

5.6 AMSAC bypass interfaces

5.6.1 AMSAC bypass interfaces for placing each AMSAC train in the bypass/normal mode per GOP instructions shall be easily accessible to the MCR operators via hardwired switches located within the locked AMSAC MCR cabinets (one per each train) in the similar way as in the existing system. Current location of the AMSAC "BYPASS/NORMAL" switch for one train can be seen on the right side of Figure 4.

5.7 MCB interfaces

NOTE: Existing MCB operators' interfaces shall be preserved.

5.7.1 AMSAC MCB interfaces are located on the MCB sections B, C and D as seen in Figure 5:

- MCB section B: TSLB1 (LB517, LB527, LB518, LB528, AMSAC A P_{TU}> 40%, AMSAC B P_{TU}> 40%,)
- MCB section C: ALB 09, 1/PBAMA, 1/PBAMB
- MCB section D: BPLB (AMSAC BLOCKED C-20)

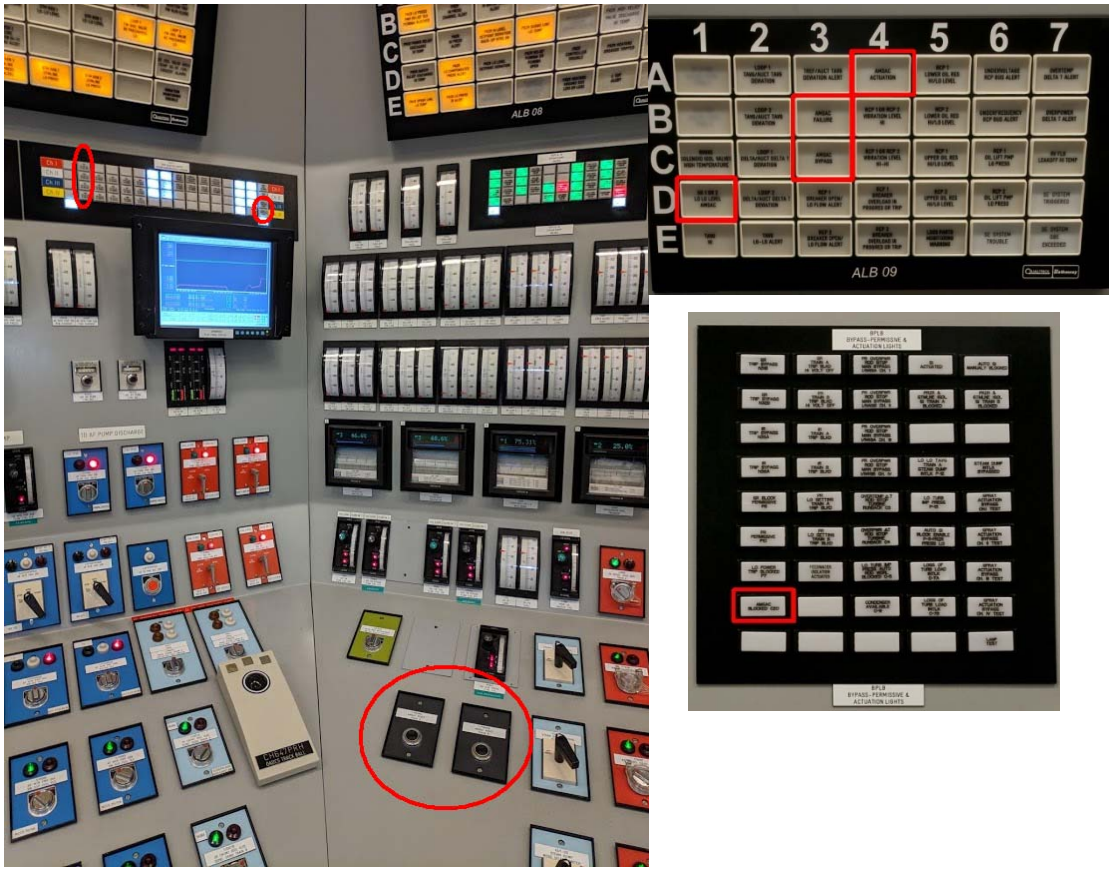

Figure 5: MCB controls and indications

5.8 Class 1E relay boxes EE106PNLK106 and EE106PNLK306

NOTE: Existing AMSAC 1E relay boxes EE106PNLK106 and EE106PNLK306 shall be preserved.

5.8.1 The Class 1E relays are mounted in the two separate wall mounted enclosures EE106PNLK106 and EE106PNLK306, located in the CB switchgear rooms Train A and Train B, acting as interface between NSR AMSAC and actuation circuits.

5.8.2 Each relay box contains eight (8) relays, each having four (4) form-C contacts. Relays are energized to actuate.

5.8.3 Each output to SSPS (for each train) consists of two pairs of contacts from two different Class 1E relays arranged in an “AND” logic to trigger certain action.

5.8.4 The two Class 1E relays for the same output action in each train shall be driven by the two different output boards of the I/O crate in the same train suitable for relay driving.

5.8.5 The AMSAC actuation signals (contact closure/opening) exiting the Nuclear Safety Related relay boxes Train A and B are routed to the SSPS output cabinets Train A and B respectively where they are connected in series or parallel (depending on the required action) with the existing SSPS actuation signals contacts.

5.9 MCB AMSAC reset pushbuttons

NOTE: Existing MCB reset pushbuttons shall be preserved.

5.9.1 One AMSAC reset pushbutton per train (type Westinghouse OT-2) is installed on the Main Control Board section C, as shown in Figure 5. These pushbuttons are installed as per the same requirements as those followed for the similar MCB equipment.

a) 1/PBAMA AMSAC RESET TRAIN A

b) 1/PBAMB AMSAC RESET TRAIN B

5.9.2 The Control Board mounted equipment and cable conduits are mounted and installed per seismic anti-falldown criteria to ensure that this equipment would not come loose from their mounting during a design basis seismic event.

5.9.3 Reset signal has to be provided to the AMSAC logic and to the latching relays.

5.9.4 If needed by the new system, the additional Control Board mounted equipment masses and cut outs shall be evaluated to confirm that the existing seismic qualification of the MCB is not violated.

5.10 MCR status and permissive lights

NOTE: Existing MCR status and permissive lights as seen in Figure 5 shall be preserved.

5.10.1 A permissive status light indicating when the AMSAC is blocked by the C-20 permissive is installed on the BPLB Bypass-Permissive & Actuation Lights Box in the section D of the Main Control Board. This status light is located on the BPLB window 1.8 and engraved "AMSAC BLOCKED C-20".

5.10.2 Four partial trip status lights are installed on the Trip Status Light Box TSLB-1 on the section B of the Main Control Board to indicate Steam Generator level signals below setpoint (8%). These status lights are wired to the TSLB-1 windows 2.1, 2.2, 2.3 and 2.4.

5.10.3 Two status lights are installed on the Trip Status Light Box TSLB-1 on the section B of the Main Control Board to indicate Turbine pressure signal above set point (40%). These status lights are wired to the TSLB-1 windows 16.3 and 16.4.

5.11 MCR AMSAC alarms

NOTE: Existing MCR AMSAC alarm scheme shall be preserved.

5.11.1 All alarms shall be actuated by contacts closure in the AMSAC cabinets. These contacts shall be wired to the existing annunciator logic cabinet ASELAL01A02, at the terminals corresponding to the alarm windows selected.

5.11.2 All AMSAC alarm dry contact outputs shall be capable of driving 0.5 A AC or DC in a 100 VA load.

5.11.3 One grouped alarm on the MCB section C ALB09 window 22 indicates partial trip of the low Steam Generator level bistables ("SG LO-LO LEVEL-AMSAC").

5.11.4 One alarm on the MCB section C ALB09 window 04 indicates when the AMSAC has been actuated ("AMSAC ACTUATION").

5.11.5 One alarm on the MCB section C ALB09 window 10 indicates failure in the AMSAC cabinet ("AMSAC FAILURE") based on the AMSAC power failure, internal AMSAC processing failure or unacceptable deviation between the two input signals of the same parameter being measured (±20% range difference in 20 seconds).

5.11.6 One alarm on the MCB section C ALB09 window 17 indicates that AMSAC function is bypassed for maintenance/test purpose ("AMSAC BYPASS").

5.11.7 If required by the new system functionality, the CONTRACTOR could suggest up to two (2) additional MCB alarms for the MCR operators in order to have the best possible information about the equipment condition and status while preserving reserved number of dedicated alarm windows. The operations course of actions shall be provided following the particular alarm triggered.

5.12 SSPS interfaces

NOTE: Existing SSPS interfaces shall be preserved.

5.12.1 Turbine trip

a) AMSAC Train A contacts (NC) are wired in series with the SSPS contact 1-2 (NC) of relay K617 and K618 (Train A) respectively.

b) AMSAC Train B contacts (NC) are wired in series with the SSPS contacts 1-2 (NC) of relays K617 and K618 (Train B) respectively.

5.12.2 Motor driven auxiliary feedwater pump actuation

a) AMSAC Train A contacts (NO) are wired in parallel with the SSPS contact 1-2 (NO) of relay K640 (Train A).

b) AMSAC Train B contacts (NO) are wired in parallel with the SSPS contact 1-2 (NO) of relay K640 (Train B).

5.12.3 Turbine driven auxiliary feedwater pump actuation

a) AMSAC Train A contacts (NC) are wired in series with the SSPS contact 1-2 (NC) of relay K641 (Train A).

b) AMSAC Train B contacts (NC) are wired in series with the SSPS contact 1-2 (NC) of relay K641 (Train B).

5.12.4 Steam generator blowdown containment isolation valves closure

a) Valve 1-7603A: AMSAC Train A contacts (NC) are wired in series with the SSPS contact 17-18 (NC) of relay K630 (Train A) and contact 11-12 (NC) of relay K640 (Train A).

b) Valve 1-7603B: AMSAC Train B contacts (NC) are wired in series with the SSPS contact 17-18 (NC) of relay K630 (Train B) and contacts 11-12 (NC) of relay K640 (Train B).

c) Valve 1-7661B: AMSAC Train A contacts (NC) are wired in series with the SSPS contact 17-18 (NC) of relay K631 (Train A) and contact 15-16 (NC) of relay K640 (Train A).

d) Valve 1-7661A: AMSAC Train B contacts (NC) are wired in series with the SSPS contact 17-18 (NC) of relay K631 (Train B) and contacts 15-16 (NC) of relay K640 (Train B).

5.12.5 Steam generator blowdown sampling isolation valves closure

a) Solenoid A of valves 55262 and 55263: AMSAC Train A contacts (NO) are wired in parallel with the SSPS contact 3-4 (NO) of relay K641 (Train A).

b) Solenoid B of valves 55262 and 55263: AMSAC Train B contacts (NO) are wired in parallel with the SSPS contact 3-4 (NO) of relay K641 (Train B).

5.12.6 Steam dump limitation

a) AMSAC Train A contacts (NC) are wired in series with the SSPS contact 3-4 (NC) of relay K703 (Train A).

b) AMSAC Train A contacts (NO) are wired in parallel with the SSPS contact 1-2 (NO) of relay K703 (Train A).

c) AMSAC Train B contacts (NC) are wired in series with the SSPS contact 3-4 (NC) of relay K703 (Train B).

d) AMSAC Train B contacts (NO) are wired in parallel with the SSPS contact 1-2 (NO) of relay K703 (Train B).

5.13 Plant computer (PIS) interfaces

a) All signals sent to the PIS shall be contact closures.

b) All AMSAC dry contact outputs shall be capable of driving 0.5 A AC or DC in a 100 VA load.

c) At least the following existing AMSAC status information shall be available through the NEK PIS system as hardware contacts:

- four partial trip signals from the SG Lo-Lo level signals used for AMSAC initiation
- two signals from the turbine impulse pressure signals used to arm AMSAC
- one signal indicating AMSAC actuation
- two signals indicating AMSAC cabinet failure and bypass
- one signal indicating that AMSAC is blocked by the C-20 permissive
- AMSAC alarms

5.14 Power sources, cables and wiring

a) The AMSAC cabinet power supply shall be from an instrument power supply independent from power supplies used for the existing protection system.

b) AMSAC should be capable of performing its intended protection in case of loss of off-site power.

c) Equipment housed within two AMSAC process cabinets shall remain to be powered from 118 Vac vital power inverters:

- EE107PNLJ005 - Train A (BRKR 8, 15A)
- EE107PNLJ006 - Train B (BRKR 8, 15A)

d) Operating voltage shall be 120 Vac ±10%.

e) Operating frequency shall be 50 Hz ±5% with total harmonic distortion less than 10% and single harmonic distortion less than 3%

f) Redundancy of the internal power supplies (shared load configuration is preferred) shall be used in order to minimize the risk of the power loss to the equipment. AC breaker for each power supply shall be provided. Maintenance and replacement of a failed power supply shall not disrupt operation of the system.

g) It is CONTRACTOR's responsibility to select and properly dimension cables and wires. Such cable and wire design shall be selected to prevent external electromagnetic interference causing fault signals.

5.15 Raceway requirements

All cabinets' external wiring shall remain unchanged. Only new internal interconnecting wiring to the new equipment shall be installed. Being Non-Safety Related system, there are no requirements for the AMSAC cabling separation related to the different system trains, however each train will be installed in a separate MCR cabinet (back-to-back arrangement).

5.16 Cabinet wiring

a) Internal wiring shall follow acceptable industry practice and shall be neatly bounded and marked on both ends.

b) Wires color-coding for power distribution shall comply with the EU standards i.e. blue lines for neutral, yellow/green lines for grounding.

c) Wires shall be pulled in one piece and terminated at the appropriate terminal blocks i.e. no wire extensions are allowed without termination. All spare contacts from relays, switches etc. shall be wired to the terminals, as well.

d) Terminal blocks for incoming and outgoing wiring shall be accessible for connecting and testing. Terminal blocks shall be mounted so that adequate clearance is provided for routing, fanning, and terminating of the incoming cables. The CONTRACTOR shall place all its connections, including jumpers, on one side of the terminal blocks, leaving the other side for field connections. A maximum of two wires shall be terminated at any one terminal. Connection to the terminal blocks shall be such that the loop areas are minimized.

e) Separation between power, I&C as well as AC and DC internal wiring shall be maintained.

f) Use of line filters for electric power is mandatory.

g) Cable shields shall be terminated in such manner that exposure of the conductors is minimized.

h) The use of solid wires shall be avoided.

i) Cables shall be protected from sharp edges.

5.17 Material requirements

All materials shall be in accordance with the existing plant standards and practices for Main Control Room. All internal wiring and cabling shall have fire retardant insulation and outer jackets. Refer to the section 13 of this specification for more details.

5.18 Electrical insulation

All cables must be electrically insulated and must be composed of LS0H (Low Smoke 0-Zero Halogen) polymers which are self-extinguishing in the event of fire and halogen free (non-toxic). Refer to the section 13 of this specification for more details.

5.19 Operational and protective grounding

Protective equipment grounding shall be implemented in compliance with EDC-5 “Electrical Engineering Design Criteria for Grounding systems Design Criteria”, I&C EDC-6 “Engineering Design Criteria for Instrument Installation”. All mechanical assemblies, cabinets and their doors shall be grounded to the single point ground (one link per grounded item). Specific operational grounding will be determined based on the selected vendor requirements. Channels shall be immune to ground faults.

5.20 Electromagnetic compatibility (EMC)

New AMSAC system shall be able to perform its intended function without degradation or mis-operation and without adversely affecting other equipment in the electromagnetic environment in which it is installed. Refer to the sections 6.2 and 7 of this specification for more details. The susceptibility and emissions testing shall be performed in accordance with the RG-1.180 rev. 1, or EPRI-TR102323 rev. 1. The CONRACTOR shall propose preliminary set of tests. A technical rationale should be provided for each omitted test. The exact scope of EMC tests shall be mutually agreed and approved by NEK. The CONTRACTOR shall prepare wiring, earthing, grounding or other concept documents to present the plan for EMC compliance.

5.21 Local monitoring and control

The local operating mode shall be used only for the system commissioning, testing and maintenance. Local mode shall be selectable only from the inside of the AMSAC process cabinets behind locked doors to prevent inadvertent switchover.

5.22 Accessibility

Two control panels, i.e. metal enclosed cabinets with lockable front doors shall be retained. All equipment shall be easily accessible to the maintenance personnel during regular maintenance activities performed once per plant fuel cycle i.e. during the plant outage. All maintenance connection points and indications shall be located on the front of the cabinet. AMSAC operate/bypass switches shall be easily accessible to the MCR operations personnel in the similar way as on the existing system.

5.23 Surveillance, test, maintenance and operational bypass requirements

The AMSAC shall be designed to include the capability for inhibiting the system outputs during the maintenance, test and operational bypass (initiated by MCR operators) requirement modes. Test/bypass status information shall be available at the system interfaces and a warning alarm outputs shall be initiated during a test/bypass condition. To the greatest extent possible, the AMSAC shall provide the capability to perform calibration and maintenance on the system while the plant is at power. Periodic maintenance will include visual checks, cleaning and functional checks. The design should be such that the time required to locate a failed module and to replace it is minimized through the use of modular construction and self-diagnostic. As much as possible simplified maintenance and testing is required.

Test disconnect terminal blocks and test points for internal power supplies shall be provided within each cabinet’s front side with sockets for the test equipment and simulated signal connections. All internal wires shall be fused.

All HW and SW required for maintenance and test shall be provided within the scope of the delivery.

Reliability shall also be assured through automatic periodic testing of the system. Automatic testing shall cover input modules, A/D converters, setpoint and timer comparison, coincidence logic, outputs to the majority voting modules, majority voting and output relay integrity.

5.24 Krško full scope simulator (KFSS) HSI

Same cabinets (without seismic or EMC qualifications) equipped with Operate/Bypass switches shall be provided for KFSS. Other modifications to the KFSS HSI are not foreseen, provided that there will be no other operators' HSI or AMSAC functionality logic changes which would then need to be implemented on the KFSS as well.

Implementation preparation and material delivery for the hardware changes is within the CONTRACTOR's scope of supply, and according to the section 6.2 of this specification.

Implementation of all KFSS software and hardware changes will be accomplished by NEK.

5.25 Engineering analyses, studies, calculations and other reports

The CONTRACTOR shall perform and submit searchable electronic copy (Adobe pdf, MS Word) of the analyses, studies, calculations and reports, which will be developed during engineering phase of the project as per section 6.2 of this specification.

5.26 Accuracy

Once calibrated, trip accuracy shall be better than ±1% of the span. The above accuracy requirement applies from input to output of the AMSAC equipment described herein and will include basic system accuracy, environmental effects, drift and bistable accuracy. Same criteria shall also apply to the C-20 permissive accuracy.

5.27 Time response requirements

Time response is defined as the time required for a signal to reach the final output device or a defined point in the system after the process signal input has passed through the setpoint with all externally adjustable time delays set to off. This is usually measured with respect to a step change in input signal. For setpoint measurements, this should be measured with a 5% symmetrical step change through the setpoint. Processing time from input to output of the equipment described. herein shall be limited to one (1) second.

5.28 Overload and recovery characteristics

Overload (over-range) of any instrument channel or component in the AMSAC system shall result only in saturation of the affected components in the direction of the overload. During the time that the signal is outside of the normal signal range no noise or oscillations should exceed 1% peak-to-peak of the channel range at any point in the system.

After the out-of-range signal causing the overload returns from the overload condition, all components of the system must recover from the saturated condition and return to their correct output values (within nominal accuracy and noise limits) within two (2) seconds. During recovery from overload, the output of all affected components must progress smoothly from saturated value to the correct value without noise, oscillations, or overshoot larger than 1% (peak-to-peak) of the channel span.

5.29 Noise limits

The peak-to-peak noise shall be limited to 0,5% of the output span for any noise occurring in a frequency range that could affect downstream modules or system components. These limits apply to all noise generated from the signal detecting onward.

5.30 Seismical test reports

Test reports shall prove the structural integrity and anchorage of the new MCR cabinets during design basis seismic events as well as proper fixation of the equipment within these cabinets so that the installed equipment will not become loose from their mounting during design basis seismic events and shall not degrade the isolation capabilities of the output relays. Refer to the Appendix 5 of this specification and referenced NEK specification SP-S702 for appropriate NEK response spectra.

System shall be immune to the spurious activation in case of a seismic event as defined in the section 16.2 of this specification.

5.31 **Provide the design approach report to fulfil twenty (20) years of service life**

A summary report shall be provided to briefly explain the CONTRACTOR's design approach to fulfill a goal for the system life time of twenty (20) years.

6. APPLICABE NEK-CONTRACTOR DESIGN CONTROL PROGRAM

6.1 For NEK quality related topics refer to the "QS 600; Quality Assurance Program for Software" and "QS-610; Quality specification QS 610 - Generic Quality Assurance Program Requirements" in Appendix 3 and Appendix 4 as well as requirements in the section 43 of this specification.

6.2 **Design modification control program**

6.2.1 For all design changes included in the scope of project, the CONTRACTOR shall comply with requirements of the NEK Design Modification Control Program and provide services according to its implementation procedures for preparing, processing and controlling modifications and design changes to the NEK structures, systems and components. The following NEK modification implementation procedures and design criteria shall apply:

- ADP-1.0.131 Plant Design Modification Implementation Organization
- ADP-1.1.033 NEK Safety at Work and Health Protection
- ADP-1.1.051 NEK Technological Area Entry, Movement and Exit Guidelines
- ADP-1.1.101 Foreign Material Exclusions
- ADP-1.1.105 Temporary Equipment Lay Down in Technological Area
- ADP-1.1.122 Work Order Preparation
- ADP-1.1.125 Work Order Execution
- ADP-1.1.142 NEK Equipment Lifting Requirements
- ADP-1.2.003 Plant Design Modification and Control Process
- ADP-1.2.029 Equipment Labeling control
- ADP-1.2.100 MECL Maintenance and Control
- ADP-1.2.116 NEK Document Control
- ADP-1.2.127 Quality Records Management
- ADP-1.3.004 Equipment Tagout
- ADP-1.8.005 External Workers Entry Into NEK
- ADP-1.14.202 Personal Safety Equipment Requirements
- ESP-2.113 NEK Equipment Numbering System
- ESP-2.302 Administration of Changes to the USAR
- ESP-2.303 Evaluation of Changes in NEK (10CFR50.59)
- ESP-2.602 Plant Design Modification
- ESP-2.604 Design Considerations, Bases and Inputs
- ESP-2.605 Design Analyses and Calculations

- ESP-2.606 Peer Reviews
- ESP-2.609 Field Design Change Request
- ESP-2.611 Design Modification Turnover and Closeout
- ESP-2.613 CAD Drawing Control for Revision and Submittal
- ESP-2.618 System Design Description
- ESP-2.619 Preparation of Installation Packages
- ESP-2.624 Design Impact Evaluation
- ESP-2.631 EMC Program in Design Modification Process
- ESP-2.912 Documentation of New Applications for Process Computer Systems
- E/EDC Electrical Engineering Design Criteria
- I&C/EDC Instrumentation and Control Engineering Design Criteria
- ED-1 NEK Design Modification Control Program
- ED-2 NEK Document Control Program
- ED-3 NEK Records Control Program
- ED-11 NEK Process Computers Configuration Control Program
- ED-15 NEK Configuration Control Program
- ED-19 NEK Electromagnetic Compatibility program
- SP-3 NEK Cyber Security Program
- QS 600 Generic Software Quality Assurance Program Requirements
- QS 610 Generic Quality Assurance Program Requirements
- SP-S702 Seismic Analysis,Testing and Documentation
- USAR Updated Safety Analysis Report
- 10CFR50 Appendix B Quality Assurance Criteria for Nuclear Power Plants and Fuel Reprocessing Plants

6.2.2 In accordance with the abovementioned procedures and criteria, sections 11.5, 11.6, 11.7 and 11.11 the following services shall be provided by the CONTRACTOR and its subcontractors which are approved by NEK for engineering services and development of the technical documentation according to the NEK design modification process and ESP procedures:

a) Perform the necessary walk-downs prior to the design review, to verify design inputs for the DMP development.

b) Develop and verify the DI in accordance with the NEK procedures ESP-2.604, ESP-2.605, ESP-2.606 and ESP-2.624.

c) Perform a detailed "line-by-line" check of DI, calculations, analyses and evaluations, and submit signed checklists of the peer reviews in accordance with the NEK procedure ESP-2.606 to NEK for review and approval.

d) Prepare the final SES and SE in accordance with the NEK procedure ESP-2.303.

e) Prepare the UCP in accordance with the NEK procedure ESP-2.302 (based on the new system architecture).

f) Develop the DMP 1194-AM-L in accordance with the NEK procedure ESP-2.602 and referenced procedures within.

g) Develop the IP in accordance with the NEK procedure ESP-2.619.

h) Prepare the MECL database update based on the CONTRACTOR provided data to facilitate the identification of all removed and newly installed components in accordance with the NEK procedure ADP-1.2.100.

i) Prepare the TOP after equipment installation, including documents for archiving and MECL database updates (DCM forms: DIW and DUR) in accordance with the NEK procedure ESP-2.611.

j) Include accomplished engineering studies, analyses, and calculations in the DMP.

7. APPLICABLE CODES, STANDARDS, AND DESIGN CRITERIA

7.1 General

7.1.1 Applicable Codes, Standards and Regulations (from this point forward named as standards) for procurement, design, manufacturing, installation and testing are listed in the section 7.2 of this specification. Applicable standards shall be of the latest revision.

7.1.2 The CONTRACTOR shall provide a list of all standards anticipated to be used for equipment supply and replacement with the Bid. If the new standard is proposed as a replacement for the standard listed in the section 7.2 of this specification, the CONTRACTOR shall provide a justification.

7.1.3 If no requirement for applicable standard is specified herein, the CONTRACTOR shall propose a standard customary to the industry requirements. Proposed standards shall be at NEK disposal for perusal.

7.1.4 CONTRACTOR shall be responsible for compliance with all applicable standards defined within this specification or required by the licensing authorities for the Work offered. NEK will accept only material and equipment, which meet the criteria of this specification.

7.2 List of applicable standards, codes and requirements

7.2.1 10CFR50.62; Requirements for reduction of risk from anticipated transients without scram (ATWS) events for light-water-cooled nuclear power plants.

7.2.2 SECY-83-293; Amendments to 10CFR50 Related to Anticipated Transients Without Scram (ATWS) Events by NRC

7.2.3 NUREG-0460; Anticipated Transients Without Scram for Light Water Reactors

7.2.4 WCAP-1 0858-P-A Rev.1; "AMSAC Generic Design Package"

7.2.5 GL 85-06; Quality Assurance Guidance for ATWS Equipment that is not Safety Related

7.2.6 WCAP-8420; Anticipated Transient Without Trip Analysis for a 2-Loop Westinghouse PWR with Model D Steam Generator and 16x16 Fuel Array

7.2.7 WCAP-11992; Joint Westinghouse Owners Group/Westinghouse Program: ATWS Rule Administration Process

7.2.8 WCAP-11993; Joint Westinghouse Owners Group/Westinghouse Program: Assessment of Compliance with ATWS Rule Basis for Westinghouse PWRs

7.2.9 WASH-1270; Technical Report on Anticipated Transients Without Scram for Water-Cooled Power Reactors

7.2.10 SSR-NEK-7.7; KRŠKO Modernization - Uprate: Anticipated Transient Without Scram

7.2.11 ANSI N45.2-77; Quality Assurance Program requirements for Nuclear Facilities

7.2.12 RG 1.89; NRC Environmental Qualification of Certain Electric Equipment Important to Safety for Nuclear Power Plants

7.2.13 IEEE 279-1971; Criteria for Protection Systems for Nuclear Power Generating Stations

7.2.14 IEEE 1050-1989; Guide for Instrumentation and Control Equipment Grounding in Generating Stations

7.2.15 IEEE 336-1985; Installation, inspection and testing requirements for power, instrumentation and control equipment at nuclear facilities

7.2.16 IEEE 7-4.3.2; Standard Criteria for Digital Computers in Safety Systems

7.2.17 ISO/IEC/IEEE 29148-2018; Systems and software engineering -- Life cycle processes -- Requirements engineering

7.2.18 ISO 9001; International Standards Organization - Quality management and QA system

7.2.19 GDC 1; Quality Standards and Records

7.2.20 GDC 3; Fire Protection

7.2.21 GDC 13; Instrumentation and Control

7.2.22 GDC 24; Separation of Protection and Control

7.2.23 ED-1; NEK Design Modification Control Program

7.2.24 ED-19; NEK Electromagnetic Compatibility program

7.2.25 NRC RG-1.168; Verification, validation, reviews, and audits for digital computer software used in safety systems of nuclear power plants

7.2.26 NRC RG-1.170; Test documentation for digital computer software used in safety systems of nuclear power plants

7.2.27 NRC RG-1.171; Software unit testing for digital computer software used in safety systems of nuclear power plants

7.2.28 NRC RG-1.172; Software requirement specifications for digital computer software and complex electronics used in safety systems of nuclear power plants

7.2.29 NRC RG-1.173; Developing software life-cycle processes for digital computer software used in safety systems of nuclear power plants

7.2.30 NRC RG-1.180, rev. 1; Guidelines for evaluating electromagnetic and radio-frequency interference in safety-related instrumentation and control systems

7.2.31 EPRI TR-102323, rev 1; Guidelines for Electromagnetic Interference Testing of Power Plant Equipment

7.2.32 NRC RG-5.71; Cyber security programs for nuclear facilities

7.2.33 EPRI 3002008023; Cyber Security Technical Assessment Methodology: Vulnerability Identification and Mitigation, Final Report

7.2.34 SP-3; NEK Cyber Security Program

7.2.35 SP-S702; NEK Seismic analysis, testing, and documentation

8. IDENTIFICATION OF THE AFFECTED SYSTEMS

8.1 AM (AMSAC)

9. IDENTIFICATION OF THE AFFECTED EQUIPMENT

9.1 Affected is all equipment (WDPF I&C) housed within the two MCR AMSAC cabinets:

a) CB103RCKK808: AMSAC A CABINET

b) CB103RCKK809: AMSAC B CABINET

10. SUPPLEMENTAL DATA

10.1 The work within the scope of the Contract shall include the furnishing of all materials, labor, equipment, tools, protection and incidental items, necessary to complete each portion of the work in an acceptable manner.

10.2 The Contract documents are complementary and any work called for by any part thereof shall be executed as part of the Contract in the same manner as if called for in all parts. Therefore, all work that may be called for in the specification and not shown on the drawings, or shown on the drawings but not called for in the specification, shall be executed and furnished by the CONTRACTOR as if described in both documents.

10.3 Should any work or materials be required, which are not denoted in the specification, drawings or other Contract documents, either directly or indirectly, but which are necessary for the proper carrying out of the intent thereof (according to the turn-key definition in the Contract), the CONTRACTOR is to understand the same to be implied and required, and shall perform all work and furnish all materials as fully as if they were particularly described.

10.4 All items attached to this specification, and listed in the section 45 of this specification, are hereby made a part of this specification.

10.5 The supplemental documentation listed below is not an integral part of this specification; however, it is available upon request:

a) NEK USAR; CHAPTERS 7.2, 7.8 and 15.8

b) NEK PLS; Precautions, Limitations and Setpoints for Nuclear Steam Supply Sys.

c) SSR-NEK-7.7; Krško Modernization-Uprate: Anticipated Transient Without Scram

d) PMI-4.090; AMSAC - Preventive Maintenance/Test Procedure Train A & B

e) OSP-3.4.632; AMSAC Functional Test Procedure

f) ARP-3.309; Alarm Response Procedure NSSS MCB ALB 09

g) GOP-3.1.100; Cold Shutdown to Hot Shutdown and Hot Shutdown to Hot Standby

h) GOP-3.1.500; Hot Standby to Hot Shutdown and Cold Shutdown

i) SP-S702; REV. 10, Seismic Analysis, Testing and Documentation

j) WENX 95-06; ATWS Mitigation System Actuation Circuitry

k) WCAP-1 0858-P-A Rev.1; "AMSAC Generic Design Package"

l) 020-RP-L; NEK AMSAC Modification Package

m) ED-1, Design Modification Control Program

n) ED-19, Electromagnetic Compatibility Program

o) ESP-2.631; EMC program in design modification process

p) SP-3, Cyber Security Program

q) ESP-2.921; Cyber Security Assessment of Critical Digital Assets in NEK

11. DOCUMENTS SUBMITTAL

11.1 General

11.1.1 Documentation that is required to be submitted by the CONTRACTOR to NEK shall be as requested per this specification and the Contract. In addition, the CONTRACTOR shall provide any additional, mutually agreed, documentation not specifically identified herein. Documentation shall be provided to NEK according to the delivery schedule defined in the Contract and this specification.

11.1.2 When a revised document is submitted for review, the changes from the previous revision shall be clearly identified by revision bars in the affected sections and with "Track Changes" option turned on in the MS Word documents. New revision number of a document with date of the revision (e.g. in a revision/title block or revision history section) shall be provided. Only documents, particularly drawings, clear and legible in all respects will be accepted.

11.1.3 All document deliverables shall be submitted in two (2) versions as a minimum:

a) for NEK review,
b) final version to be approved by NEK.

11.1.4 All documents for review shall be delivered to NEK in three (3) hard copies and one (1) soft copy (structured electronically searchable pdf files with bookmarks and active cross reference links). All final documents shall be delivered in six (6) hard copies and six (6) electronically searchable soft copies on the portable media with files in format as applicable: structured pdf, MS Word, MS Excel, MS Access, AutoCAD etc.

11.1.5 All documentation shall be prepared and finalized for the complete scope offered.

11.1.6 All submitted documents shall bear at least the following identification:

- Contractor's name
- Authors' signatures
- Date of issue
- Document number
- Revision number
- NEK's order number
- NEK's specification number

11.2 Bid documentation

11.2.1 The CONTRACTOR shall submit at least one (1) electronically searchable copy (Adobe pdf) of the Bid documentation. Minimum required content of the Bid documentation shall include:

a) Technical description of the offered project scope

a. Detailed technical description of the new AMSAC system

b. Bill of Materials

c. Scope of supply and work:

i. Detailed description of the services offered (incl. design, manufacturing and transportation from the factory to the NEK site)

ii. Existing equipment removal and detailed description of the installation

iii. FAT and SAT

iv. Required and recommended spare part list for delivery

d. Document submittal scope and schedule

e. Preliminary overall project schedule

f. List of all subcontractors

g. Division of work and responsibilities

h. Preliminary Quality management (manufacturing and installation)

i. Reference list of the similar projects performed in the last 10 years (see details in the section 17 of this specification)

b) Commercial, QA and training

a. Pricing (incl. offer validity and unit pricing)

b. Terms of payment

c. Delivery dates

d. QA program manual

e. PQP draft

f. Training program content and schedule

11.3 Project management manual (PMM)

Within one (1) month after the Contract award the CONTRACTOR shall submit, filled in as applicable, PMM provided in this specification as an Appendix 2 for NEK review and final approval. PMM shall be submitted as a searchable electronic copy in the MS Word or Adobe pdf file format.

11.4 Project quality plan (PQP)

Within one (1) month after the Contract award the CONTRACTOR shall submit mutually agreed searchable electronic copy (Adobe pdf, MS Word) of PQP for NEK approval as specified in the section 43 of this specification. Initial revision of PQP shall include finalized test and inspection, i.e. QC plan for manufacturing phase. Finalized installation QC plan shall be issued not later than four (4) months before the installation phase.

11.5 Design review documents

11.5.1 At the latest twenty (20) months prior to the scheduled installation during the plant outage, but before the start of manufacturing, joint design review meeting shall be held to discuss the technical details of the project. Design review meeting date shall be agreed upon by the CONTRACTOR's and NEK RE. Following the design review a functional design freeze shall apply.

11.5.2 Prior to the design review meeting a preliminary review of the issued design documents (e.g. drawings, reports, studies, analyses, data, etc…) will be carried out by NEK to ensure minimal impact on the work.

11.5.3 Searchable electronic copy of each design document (Adobe pdf, MS Word) shall be submitted to NEK for review.

11.5.4 The CONTRACTOR's documents review by NEK shall not be held to relieve the CONTRACTOR of any part of its responsibility to meet all of the requirements of this specification or for the correctness of the documents and drawings.

11.5.5 Any component manufacturing completion or shipment made prior to the review and approval of the applicable design document will be at the CONTRACTOR's risk.

11.5.6 NEK RE shall have the right to request from the CONTRACTOR a repair or replacement of any defective equipment which does not comply with this specification. Repair or replacement of such equipment shall be at the sole discretion of the CONTRACTOR.

11.6 Design modification package (DMP)

11.6.1 At the latest twelve (12) months prior to the scheduled refueling outage the CONTRACTOR shall develop and submit three (3) hard copies and a searchable electronic copy (Adobe pdf, MS Word) of the DMP for review as specified in the section 6.2 of this specification.

11.6.2 DMP review and approval shall be completed at least nine (9) months prior to the scheduled refueling outage.

11.6.3 All issued, reviewed and approved engineering studies, analyses, and calculations during the design phase of the project shall be included in the DMP per ESP-2.602.

11.7 Installation package (IP)

11.7.1 At the latest eight (8) months prior to the installation, the CONTRACTOR shall develop and submit three (3) hard copies and a searchable electronic copy (Adobe pdf, MS Word) of the IP for review and approval as specified in the section 6.2 of this specification. Field implementation and SAT procedures shall be included in the IP.

11.7.2 Final approved copies shall be delivered at least seven (7) months prior to the installation.

11.7.3 Electronic copies (Adobe pdf) of Materials Safety Data Sheets in Slovene language for all hazardous materials which will be used during the implementation phase, shall be provided separately.

11.7.4 One (1) hard copy and a searchable electronic copy (Adobe pdf, MS Word) of Safety Plan for installation per the Contract requirements shall be provided separately.

11.8 Operation and maintenance instruction books

11.8.1 At the latest four (4) months prior to the site installation the CONTRACTOR shall provide six (6) hard copies and six searchable electronic copies on the portable media (Adobe pdf, MS Word) of the following:

a) AMSAC system instruction book

b) All vendor documentation for equipment to be delivered

11.9 Equipment parts catalogue

11.9.1 A detailed, searchable, electronic parts catalogue (Adobe pdf) of the AMSAC system and associated equipment shall be provided as a stand-alone document.

11.10 Inspections, tests and other quality records (QRP)

11.10.1 Inspections, tests and other quality records shall be submitted to NEK as they originate.

11.10.2 At the end of manufacturing and installation phases a compilation of all issued quality records shall be collected in two separate documents, manufacturing QRP and installation QRP.

11.10.3 Quality records from the design phase (if any) shall be included in the manufacturing QRP and quality records from the transportation phase shall be included in the installation QRP.

11.10.4 Manufacturing and installation QRP content shall be mutually agreed prior to the start of each phase on a quality kick-off meeting with the CONTRACTOR and its subcontractors.

11.10.5 Each QRP shall be provided in one (1) hard copy and one (1) electronically searchable copy (Adobe pdf).

11.11 As-built documentation (TOP)

11.11.1 Within three (3) months after the equipment installation completion, the CONTRACTOR shall develop and submit one (1) complete set of as-built documentation, including DCM forms for review and approval as specified in the section 6.2 of this specification.

11.12 Other documents

11.12.1 At least four (4) months before the equipment installation a maintenance procedure with associated integral tests and checks sheets for the whole AMSAC system shall be submitted together with the AMSAC system instruction books. The procedures shall be in English, Slovenian or Croatian language.

11.12.2 Detailed time schedule for installation and commissioning, shipping, handling and storing procedure shall be submitted in accordance with the section 34 of this procedure.

12. PERFORMANCE REQUIREMENTS

12.1 All equipment capabilities and performance must fully comply with the requirements defined in the section 5 and being proven according to the section 15 of this specification. Any deviation from these requirements shall be documented and brought to the immediate NEK attention, regardless whether deviation for worse or for better.

12.2 The CONTRACTOR shall prepare site test program in order to prove that all equipment is fully capable to operate in all operating modes with performance as designed. Test program shall be accepted and approved by NEK.

13. MATERIAL REQUIREMENTS

13.1 All materials shall be new and of the best quality, suitable for the purposes, free from defects and unacceptable imperfections. All materials shall conform to the CONTRACTOR's procurement standards, which have been proven satisfactorily in the past and meet the applicable codes and requirements for the offered Work.

13.2 The CONTRACTOR shall be fully responsible for all materials' selection, procurement and factory incoming inspection.

13.3 Fire resistant, flame retardant, low-smoke and halogen-free materials shall be used. Materials used for wire troughs, conduits, wire or cable ties and terminal boards shall be fire resistant, of self-extinguishing material defined by ASTM D 635 or equivalent standard. Polyvinyl Chloride (PVC) and polyethylene shall not be used, nor shall any material be allowed which melts and its droplets carry the flame. All cables must be electrically insulated and must be composed of LS0H (Low Smoke 0-Zero Halogen) polymers which are inflammable and self-extinguishing in the event of fire and also halogen free (non-toxic). Cables shall meet at least minimum requirements from this chapter and must pass flame test according to IEEE 383 or equivalent.

13.4 Materials of limited shelf life shall not be used after their expiration date.

13.5 Certificate of Compliance shall be provided for all materials and parts delivered.

13.6 Equipment specifications and procedures listed in the QC plan will be available for review at the CONTRACTOR's and its subcontractors' facilities.

13.7 The CONTRACTOR shall submit Materials Safety Data Sheets, in Slovenian language, for all hazardous materials delivered or used on the NEK site during the installation as a part of the IP.

14. FABRICATION AND ASSEMBLY REQUIREMENTS

14.1 General

14.1.1 All materials, supplies, and articles furnished by the CONTRACTOR or its subcontractors will be procured per CONTRACTOR's QA requirements and standards. Documentation will be provided in accordance with the mutually agreed QA plan.

14.2 Installation at NEK

14.2.1 The CONTRACTOR shall develop and submit a detailed time schedule of installation works and commissioning at least four (4) months before the start of the outage. This time schedule shall comply to the NEK outage schedule limitations and other milestones listed in the section 34 of this specification.

14.2.2 All work executed during the installation phase shall be performed according to the CONTRACTOR's field installation and inspection procedures, applicable drawings and specific written instructions. This documentation shall be available for NEK review in advance. CONTRACTOR shall always comply to the NEK standards, regulations and procedures as well as good industry practices for the similar projects.

14.2.3 The CONTRACTOR will perform all installation works including tests and inspections on site according to the NEK work management and implementation procedures as specified in the section 6.2 of this specification.

14.2.4 For all demolition and installation works the CONTRACTOR shall engage a SUBCONTRACTOR which is approved by NEK for electrical and I&C modifications implementation and is familiar with the NEK work management process. As a minimum, the SUBCONTRACTOR shall have at least three individuals trained and qualified by NEK as work leaders that were involved in the plant electrical or I&C modification implementations during the last two plant outages. NEK activities shall be coordinated by NEK personnel.

15. INSPECTIONS AND TESTS

15.1 General

15.1.1 The equipment covered by this specification shall be completely and thoroughly tested in the factory. Testing inspection and acceptance criteria shall conform to the applicable codes and standards listed in the section 7 of this specification. Delivered equipment will be assembled and software configured by the CONTRACTOR.

15.1.2 During construction, commissioning and trial operation, the CONTRACTOR shall perform, at suitable intervals, tests and inspections in the presence of the NEK personnel in order to prove the orderly execution, successful performance and operation of the work supplied and commissioned under the Contract.

15.1.3 The CONTRACTOR shall prepare detailed procedures for the site testing and trial operation according to the section 6.2 of this specification. Procedures shall be included in the IP. They shall include all relevant information, such as reference documents, test instructions, test equipment, precautions, preliminary conditions, initial and special condition requirements, description of the test, normal parameter values/acceptance criteria, measuring data sheets, etc.

15.1.4 Tests, inspections, and acceptance criteria shall conform to the applicable codes and standards listed in the section 7 of this specification. Tests and inspections not covered by these requirements shall be performed in accordance with CONTRACTOR's standards and mutually agreed QC plan.

15.1.5 Unless otherwise specified, all costs for the testing at site and of the works and charges associated with it shall be borne by the CONTRACTOR. This includes the measuring devices, properly calibrated, and any pertinent accessories (e.g., automatic data acquisition system or high-speed recording), which shall be made available by the CONTRACTOR for the entire duration of the test or inspection. The CONTRACTOR shall delegate its experts to perform the test and required inspections on site. Plant instrumentation may be used to any extent possible to obtain data.

15.1.6 NEK reserves the right to check at its own expenses the CONTRACTOR's instruments to be used or have been used for any test or inspection by an independent, officially acknowledged/certified institution.

15.1.7 CONTRACTOR shall submit mutually agreed QC plan, which includes relevant data of each planned activity such as test or inspection name, applicable standards, procedures, acceptance criteria, etc. according to the section 7 of this specification. QC plan shall conform to the detailed manufacturing and installation work sequence plan.

15.1.8 Each test or inspection shall be properly recorded, approved report shall be issued containing all relevant data such as type of the test or inspection, measuring equipment data, standard, verification against the acceptance criteria, results, date and time, relevant ambient condition under which the test or inspection has been performed, name of the person performing the test or inspection, and person responsible for the results verification, etc.

15.1.9 Before QC plan approval, mutually agreed witness and hold points shall be defined for tests and inspections. Whenever NEK representative is observing the test or inspection, the raw data report shall be available and submitted immediately after the test or inspection completion. Within the two (2) weeks after the test or inspection completion the final and approved report shall be submitted to NEK. All test and inspection reports shall be submitted to NEK after the completion of manufacturing and installation phase as a compiled QRP document.

15.1.10 NEK shall be regularly informed about the work progress. The CONTRACTOR shall preliminarily inform NEK on the dates of tests and inspections within the detailed schedule plan. At least ten (10) working days prior to the planned test or inspection the CONTRACTOR shall inform NEK in writing.

15.2 Acceptance criteria

15.2.1 NEK will accept only materials and equipment which meet the specification requirements, codes, and standards as specified in the section 7 of this specification.

15.2.2 The equipment shall operate to the full intent of this specification. Any material or equipment which fails to meet the requirement or acceptance criteria defined in the test or inspection shall be reported to NEK as a nonconformance in accordance with the section 22 of this specification.

15.2.3 Acceptance of the test results and satisfactory completion of the inspection by NEK shall not relieve the CONTRACTOR of any responsibility for furnishing the equipment completely and correctly in all respects, including all necessary devices and functions for satisfactorily operation.

15.2.4 In case of disagreement on the test results between NEK and CONTRACTOR, an independent mutually agreed expert may be appointed.

15.3 Factory acceptance testing (FAT)

FAT of the AMSAC system shall be in accordance with all of the best practices for such devices and shall assure for the high-quality products. FAT shall be performed on the actual hardware and software (both trains) to the extent practicable at the CONTRACTOR's and its subcontractors' facilities prior to the delivery to NEK.

The purpose of this test is to verify that AMASAC hardware performs in a reliable manner in accordance with the equipment specification and that the software performs in accordance with the functional requirements.

FAT shall be mutually agreed during the final manufacturing QC plan reconciliation. Testing shall include, but not be limited to the tests and verifications provided herein.

15.3.1 General

a) Inspection to verify conformance with the manufacturer’s drawings

b) Visual inspection to verify proper assembly, wiring and construction

c) Verification of the communication with all interfaces

15.3.2 Functional verification

a) FAT shall encompass full scope of the system functional and performance testing

b) Functional test of all logic, timing, alarm circuits, inputs, relay outputs, switches etc.

c) Functional test of the local and remote operator controls and interfaces

d) Signal validations of the input signals as well as A/D and D/A conversions

e) Proper system operation in case of single processor, power supply or other failures

15.4 Site acceptance testing (SAT)

15.4.1 SAT shall verify an acceptable performance of the AMSAC system during and after the installation. Scope of the SAT shall envelope full scope of FAT already performed at the CONTRACTOR's facilities with the differences related to the full project configuration. SAT shall also verify that no damage or degradation of the supplied equipment has been caused during the transportation, handling or site installation.

15.4.2 SAT shall be prepared and conducted by the CONTRACTOR according to the mutually agreed test plan; reviewed, commented and approved by NEK. It shall include, but not be necessarily limited to the following:

a) Visual checks and various controls,

b) Wiring checks,

c) Function of all signals and alarms and electrical interlocking,

d) Output signals verifications,

e) Proper overall design operation of the whole system.

16. ITEM QUALIFICATIONS

16.1 General

16.1.1 Full qualification of the AMSAC system is not required. However, the non-safety related circuitry must be electrically isolated from the existing reactor protection system. This isolation is provided at the output of AMSAC by electro-mechanical relays.

16.1.2 Based on the system importance as well as other requirements such as seismic, software, failure modes and effect analysis as well as cyber security it shall be designed per Augmented Quality requirements.

16.2 Seismic requirements

16.2.1 AMSAC seismic qualification is not required per 10CFR50.62, however new MCR AMSAC cabinets CB103RCKK808 and CB103RCKK809 (back-to-back arrangement) shall maintain their structural integrity, installed equipment shall not become loose from their mounting, shall not cause spurious AMSAC actuation and shall not degrade the isolation capabilities of the output relays during the design bases seismic event. Appropriate seismic analyses shall be performed and delivered per sections 3.2. and 5.30 of this specification.

16.2.2 The seismic floor response spectra to be considered are given in the NEK specification SP-S702 “Seismic analysis, testing, and documentation” and Appendix 5 of this specification.

16.3 Environmental requirements

16.3.1 The following environment conditions shall apply for installation of the AMSAC electronics in the Main Control Room:

Normal operation:

- Temperature: 16°C to 27°C
- Humidity: 10% to 60% RH (non condensing)
- Pressure: Atmospheric
- Radiation: N/A

Abnormal operation:

- Temperature: Maximum 49°C
- Humidity: Maximum 95% RH (non condensing)
- Pressure: Atmospheric
- Radiation: N/A

16.4 Software requirements

16.4.1 Software shall be developed in accordance with IEEE 7-4.3.2 "Standard Criteria for Digital Computers in Safety Systems" and other standards listed in the section 7 of this specification.

16.4.2 Contractor shall assure the measures to control complete software development lifecycle. The contractor's software development lifecycle shall include the following (but not limited to) activities: Planning, Requirements, Design, Implementation, Integration, Verification & Validation and Installation.

16.4.3 The contractor’s software development lifecycle shall be described in its Software Quality Assurance Program, which has to be harmonized with NEK QA Specification QS 600 requirements, and shall be attached to the Bid.

16.4.4 Contractor’s procedures for software development lifecycle activities shall be submitted to NEK for review and acceptance before implementation.

16.4.5 Detailed Failure Mode and Effects Analysis shall be performed and delivered.

16.4.6 Software Hazards Analysis shall be performed to evaluate the digital I&C system for possible malfunctions attributed to software applied to the project.

16.4.7 AMSAC system software source code with the applicable development environment shall be provided.

16.4.8 All setpoints and time delays shall be made configurable to the NEK engineers for possible future modifications.

16.5 Cyber security

16.5.1 Since AMSAC system is classified as a Critical Digital Asset (CDA) appropriate Cyber Security measures as defined in SP-3 "Cyber Security Program" and ESP-2.921 "Cyber Security Assessment of Critical Digital Assets in NEK" shall be implemented.

16.5.2 Cyber security measures as defined per NRC RG 5.71 "Cyber security programs for nuclear facilities" and EPRI 3002008023 "Cyber Security Technical Assessment Methodology: Vulnerability Identification and Mitigation, Final Report, October 2016" shall be followed.

16.5.3 CDA shall be protected from a cyber-attack by assessing its vulnerabilities and then protected using selected, available security control methods.

16.5.4 All cyber-attack pathways shall be identified and mitigated.

16.5.5 AMSAC control panels shall retain standard lock system.

16.5.6 Any modification of the PLC software shall be properly secured and restricted to the expert personnel only.

17. SPECIAL REQUIREMETS

17.1 The CONTRACTOR shall provide a reference list of the AMSAC replacements/implementations on the digital I&C platform in the last ten (10) years.

17.2 The CONTRACTOR shall provide a reference list of the similar protection system implementations in the NPPs on the same digital I&C platform as offered within this Bid. References shall not be older than ten (10) years.

17.3 The CONTRACOR shall provide proof of required manpower capabilities with appropriate qualifications and references for performing activities under the scope of this work.

17.4 The CONTRACTOR shall have QA program in place which complies with 10CFR50 Appendix B requirements.

18. CLEANLINESS

18.1 All delivered parts shall be free from dirt, scale, and unwanted grease before the shipment. The equipment shall be handled in accordance with the written procedures very carefully throughout production and packaging so that no foreign matter will be introduced into or onto the equipment and hinder its mechanical or electrical operation.

19. CORROSION PROTECTION/COATING AND PAINTING

19.1 All equipment furnished by the CONTRACTOR shall be painted per CONTRACTORS's procedures for final use. Industry standards for NPP Main Control Rooms shall be used.

19.2 Equipment shall be properly and thoroughly cleaned before the painting process. Loose rust, rust scale, mill scale and other foreign materials including dust, dirt, oil, grease, chemical contamination or any previously applied paint shall be removed to produce a clean surface suitable for the application of paint. Surfaces shall be thoroughly dried before paint applications.

19.3 All painted surfaces, both exterior and interior, shall be of uniform color and density and free of runs. Albi #487S (or equivalent) phenolic red primer shall be used for primer to obtain a dry film thickness of 2 mils minimum (0,0508 mm). The interior and exterior shall be painted with two or more coats of fire-retardant Albi 144 (or equivalent) alkyd, semi-gloss, quick drying enamel with a final minimum dry film of four (4) mils (0,1016 mm), sanding shall be applied between the coats.

19.4 The finish color shall be Light Grey, Albi 144 (or equivalent), RAL 7038.

19.5 The Supplier shall provide enough paint material for possible repainting after shipment.

20. MARKING AND IDENTIFICATION

20.1 All components shall be clearly identified in accordance with the NEK MECL designations. Components and modules where separate MECL designation does not exist shall be marked in such a way to eliminate any question or confusion at subsequent assembly or repair.

20.2 The CONTRACTOR shall establish and maintain a system for the identification of materials, parts and components according to the NEK instructions. If the CONTRACTOR offers its own identification system, it shall be approved by NEK. These measures shall ensure that the lot number, serial number or other appropriate means, either on the item or on the records maintain identification of the items traceable to the item throughout design, materials and components purchasing, fabrication, shipment and use of them.

20.3 These identification and control measures shall be designed to prevent use of the incorrect or defective material, parts and components as well as to provide a permanent record to assist in future evaluation of in-service degradation of parts.

21. PACKAGING, HANDLING AND STORAGE

21.1 The CONTRACTOR shall prepare, pack and load all materials and components in such manner that they are protected from the damage during the transportation. The CONTRACTOR shall be responsible for any damage resulting from improper packing, handling or transportation.

21.2 All parts exceeding 90 kg gross weight shall be prepared for transportation so that slings for handling by crane may be readily attached while the parts are on a car, truck, special trailer or ship’s deck.

21.3 All delicate parts subject to damage from moisture shall be packed in the hermetically sealed containers, in plastic envelopes, or in the other approved containers within their respective packing cases.

21.4 Each package and/or container shall be clearly marked and the contents identified for the proper warehousing. The outside of all containers, boxes, etc. shall be clearly marked with the total weight, point of maximum weight and correct position for the attachment of lifting hooks and cables.

21.5 The CONTRACTOR shall inform NEK of any special storage requirements to allow for necessary preparation. The CONTRACTOR shall verify the site conditions and provide written procedure for packing, receiving, handling and storing of the delivered equipment. All delivered equipment shall be on a delivery list, with marked specific instructions for handling and storage. If requested, the CONTRACTOR shall submit Handling and Storage procedure to NEK at least two (2) months in advance of shipping.

21.6 The CONTRACTOR shall specify any additional requirements necessary to maintain equipment warranties.

22. NON-CONFORMING MATERIALS

Refer to the section 43.6 of this specification.

23. SPECIAL HANDLING

23.1 As applicable, the CONTRACTOR shall specify any special handling instruction that may be required. These shall be forwarded to the designated "ship to" address prior to the arrival of the item to allow for adequate preparations. The instructions shall include the NEK Purchase order number and the expected delivery date.

24. SHELF AND SERVICE LIFE

24.1.1 The new equipment shall be designed and manufactured for twenty (20) years of service life. This shall not constitute a warranty for design life.

24.1.2 The CONTRACTOR shall not ship any item that has less than ten (10) years remaining shelf life at the time of shipment. CONTRACTOR will also provide shelf life data for the recommended and supplied spare parts by CONTRACTOR's material number or style number and price per unit.

25. 10CFR21 REPORTING

N/A

26. COMMERCIAL GRADE DEDICATION

N/A

27. CONTRACTOR DOCUMENTATION REQUIREMENTS

27.1 All document deliverables shall be submitted to NEK in form of hard copy and searchable electronic media (Adobe Acrobat [.pdf], MS Word [.docx], MS Excel [.xlsx] and Primavera P6 [.xml] file format for schedules). All documents shall be provided in English, Slovenian or Croatian language.

27.2 All document deliverables specified herein shall be delivered to the NEK RE.

28. REPAIR RECORDS

28.1.1 "Repair Record" must accompany the item(s) when returned to NEK. The "Repair Records" shall include the following information as a minimum:

a) Summary of the repair/refurbishment work that has been performed on the item(s).

b) Brief analysis of the reason for the failure of the item(s).

c) Details of any "Special Processes" used during repair that was not used during manufacturing.

d) A list of replacement parts installed in the repaired item(s).

29. SOURCE INSPECTION/SURVEILLANCE NOTIFICATION

29.1 The CONTRACTOR shall provide access to the CONTRACTOR's and its subcontractors' facilities and records pertaining to the contract for the purpose of planning and performing source inspection/surveillance activities.

29.2 Inspections or examinations performed by NEK representatives or designated representatives do not relieve the CONTRACTOR of its responsibility to meet the requirements of this specification and contract.

30. SHIPPING REQUIREMENTS

30.1 The CONTRACTOR shall be responsible for DAP to NPP Krško per Incoterms 2010.

30.2 The CONTRACTOR shall provide packaging and shipping methods for protection from effects of temperature extremes, humidity, transit shocks and mechanical damages.

30.3 Materials and all certificates or accompanying documentation supplied within the scope of this specification shall be directly shipped from the CONTRACTOR to NEK. The distributor shall not take possession of any material or documentation.

30.4 Each assembly or part of accessory equipment shall be marked for identification in accordance with the CONTRACTOR's assembly and layout drawings to facilitate assembly in the field. Shipping containers shall be clearly marked to indicate items enclosed. All subassemblies shall be clearly match-marked to facilitate field identification and installation. Lifting points shall be clearly marked.

30.5 NEK authorized source inspectors have the right to hold shipment if all the requirements from the QC plan are not met. Shipment of equipment from CONTRACTOR's shop to the port of export without submittal of CONTRACTOR's Quality Release to NEK (i.e. the final sign-off of QC plan) shall not be permitted.

30.6 The CONTRACTOR shall inform NEK of all shipping requirements providing written instructions at least two (2) months in advance of any shipping.

31. VENDOR TECHNICAL MANUAL AND REGISTERED UPDATES

31.1 The CONTRACTOR shall supply required instruction manuals according to the section 11.8 of this specification.

32. TRAINING

32.1 Training scope and schedule

32.1.1 The training shall be designed for the NEK maintenance engineers and technicians to accomplish at least the following basic objectives:

a) To instruct NEK maintenance personnel on the principles of the operation and maintenance of the newly installed equipment, including required periodic testing and inspections, so that they can have a firm understanding of all functions.

b) Revised preventive maintenance/test procedures shall be covered in details.

c) To instruct NEK maintenance personnel about equipment assembling and disassembling procedures. This part of training shall include on the job training during the assembling, installation and commissioning activities performed on site.

d) To instruct NEK maintenance personnel about the maintenance schedule for the new equipment.

e) To instruct NEK maintenance personnel about the possible malfunctions which may arise during the operation, how to perform malfunction troubleshooting and perform appropriate corrective actions to maintain safe and reliable operation.

32.1.2 The theoretical classroom training and hands-on training, both of appropriate durations, shall be provided for the NEK technical (maintenance) staff (at least six (6) persons). The CONTRACTOR shall submit a training program schedule with the Bid.

32.1.3 Classroom training shall be arranged at least six (6) months prior to the installation activities. The CONTRACTOR will be responsible for the planning and coordination of the classroom training in conjunction with the NEK RE and training department.

32.1.4 Hands-on training for the maintenance personnel shall be carried out just before or during the FAT activities on the live system configuration or alternatively during the system commissioning at NEK.

32.1.5 At least one (1) month before the training the CONTRACTOR shall submit a detailed training program schedule to NEK for review and approval.

32.1.6 NEK MCR licensed operators' training will be carried out by the NEK personnel based on the by CONTRACTOR provided training materials covering principles of the system operation and system interfaces. Training materials shall be delivered at least four (4) months prior to the system commissioning.

32.2 NEK training requirements

32.2.1 The CONTRACTOR has to fulfill the standard NEK training requirements and provide training services as follows:

a) Instructors conducting training have to possess an adequate technical knowledge and experience of the course content and have to possess adequate instructional skills.

b) Develop the training materials and documentation.

c) Provide the training materials (searchable soft copy in the Adobe Acrobat .pdf or MS Word format is acceptable) to the NEK training department at least two (2) weeks before the start of the training course.

d) Prepare hard copies of the training materials for each participant of the training course.

e) Conduct the training course.

f) Issue the training certificates for participants that successfully completed the training course and submit them to the NEK training department.

g) Within four (4) weeks after the completion of the training course prepare and submit to the NEK training department a short training course report with the following content:

- scope of the training course
- specific dates and duration
- list of instructors
- list of participants
- training certificates

- post-course student feedback analysis and results
- other relevant information

h) Provide a copy of student handouts and other written training materials to the NEK training department for archiving.

33. REVIEW AND/OR VERIFICATION OF THE WORK

33.1 The CONTRACTOR is required to perform a detailed "line-by-line" review of the all documents in the Plant Design Modification package.

33.2 The CONTRACTOR shall provide distinct evidence that such a review was conducted by presenting with the DPM package for NEK review, a set (copy) of checked drawings and documents that have been marked up with distinguishing color that would indicate that: all design inputs and design outputs agree, calculation equation references and quantitative formulas have been checked, and the various drawings have been checked against each other for continuity and overall agreement.

33.3 The CONTRACTOR shall provide a copy of all reference document (pages) used in calculations as an appendix to the calculation or design input documents so that the NEK review of the CONTRACTORS review process can be performed expediently.

34. SCHEDULE REQUIREMENTS

34.1 Overall project schedule (milestone dates)

Description	Milestone Date
Design inputs approval	October 2020
Design review completion	January 2021
DMP submittal	September 2021
DMP approval by NEK	December 2021
IP submittal	January 2022
Factory Acceptance Test	March 2022
Delivery on Site	May 2022
Installation (plant outage – 10 days)	October 2022
TOP submittal	January 2023

The CONTRACTOR shall submit the overall project schedule, within the Bid including equipment delivery and documentation submittal schedule. The proposed schedule shall be in accordance with the above project schedule milestones, and as specified in the section 11 of this specification.

35. STATUS REPORTING REQUIREMENTS

35.1 The CONTRACTOR shall provide periodic (at least monthly) written status reports for the work being performed, project progress and schedule update to NEK. The reports are expected to contain the following information in as brief a manner as possible, while still conveying the necessary information to the NEK Responsible Engineer:

a) Overall status of the work including technical and management problem areas, recovery plans to ensure that milestone schedule dates are achieved and any corrective actions being taken to implement the recovery plans.

b) Scheduled activities status as started, not started, completed and not completed since the last reporting period with an explanation of why the scheduled starts and completions are not following the schedule,

c) Scheduled activities status as started, expect to be started, or not expected to be started, expected to be completed, or not expected to be completed during the next four (4) week period and why the scheduled starts and completions are not following the schedule.

d) The CONTRACTOR shall prepare and maintain a list of project drawings and documents and indicate their update status that has been achieved during the most recent period

e) The CONTRACTOR shall provide progress updates of all activities being worked in terms of:

- Either percent (%) progress to date or remaining days needed to complete the effort,
- The determination (calculation) for the percent progress should be based on the % milestone accomplishment, for example:
  - 50% complete – Preliminary Effort Completed
  - 60% complete – Internal Contractor Review Completed
  - 80% complete – NEK Initial Reviews Completed
  - 90% complete – NEK Comments Incorporated
  - 100% complete – Document(s) Issued

35.2 The CONTRACTOR shall prepare and maintain a list of all deviations, non-conformances or field design changes and submit NEK RE original documents at the end of the activity.

36. WORK OR INFORMATION TO BE PROVIDED BY NEK

Refer to the section 3.3 of this specification.

37. CHANGES OF THE WORK SCOPE

37.1 The CONTRACTOR shall identify any scope changes, additional requirements or exceptions imposed beyond this specification's requirements that could cause an impact on the CONTRACTOR'S cost or project schedule by issuance of the "Contractor Change of the Work Scope Request".

37.2 It is the CONTRACTOR's obligation to notify the NEK RE in writing of the noted scope change and NEK RE shall attempt to respond within fifteen (15) working days with the acceptance or rejection of the CONTRACTOR's scope change request.

37.3 The CONTRACTOR shall not proceed with a change in the scope of the work until written approval has been authorized by NEK.

37.4 Unauthorized work will not be reimbursed by NEK.

38. RECORDS

38.1 The Contractor shall turn all reproducible drawings and other documents such as any changes to plant procedures, equipment technical specifications, USAR updates and by reviewers' checked drawings and documents over to the NEK RE.

39. ORGANIZATIONAL CONTACT

39.1.1 The CONTRACTOR shall assign its PM for coordinating all project matters with the assigned NEK E&DC RE. All commercial items are to be addressed with the NEK Purchasing Department and NEK project RE.

39.1.2 NEK contact persons according to the area of responsibilities are as follows:

E&DC Responsible Engineer:	name:	**Darko Cicvarić**
	phone:	+386 7 48 02 659
	e-mail:	darko.cicvaric@nek.si
Purchasing Administrator:	name:	**Gregor Cerjak**
	phone:	+386 7 48 02 329
	e-mail:	gregor.cerjak@nek.si
QA Responsible Engineer:	name:	**Natko Sorić**
	phone:	+386 7 48 02 126
	e-mail:	natko.sorić@nek.si
Design Changes Superintendent:	name:	**Janko Cerjak**
	phone:	+386 7 48 02 207
	e-mail:	janko.cerjak@nek.si

40. CONTRACTOR'S TECHNICAL APPROACH TO THE WORK

40.1 As part of the Quotation, the CONTRACTOR shall prepare a brief "Technical Approach Plan" which outlines how the work will be performed, where it will be performed, and indicates what the CONTRACTOR understands about the CONTRACTOR's scope of work to fulfill all requirements of this specification.

40.2 The plan shall also indicate similar project applications that have been performed by the CONTRACTOR in the last ten (10) years. Refer to section 17 of this specification for details.

40.3 This "Technical Approach Plan" should be incorporated into the CONTRACTOR's "Project Management Manual".

41. ACCESS TO THE CONTRACTOR'S FACILITIES AND DOCUMENTS

41.1 NEK representatives shall be allowed to access all areas where the design, fabrication and assembly of the equipment specified in this specification will take place, such as shops,

working areas, and engineering offices of the CONTRACTOR and its subcontractors for the purpose of inspection, auditing, witnessing, and control of the work being performed as well as surveying the CONTRACTOR's or the subcontractor's QA program implementation. While access to the CONTRACTOR's facilities may occur at any time requested, the access to subcontractor's facilities shall be by appointment only.

41.2 Such surveys and inspections shall include examination of the documentary evidence of the activities affecting quality and will be carried on a planned periodic and task basis, during the course of work.

41.3 NEK representatives shall keep the right to request from the CONTRACTOR to stop the work if major contractual defaults are discovered during the manufacturing, purchasing, control, or other similar process activities.

41.4 All survey and inspection activities by NEK representatives shall not relieve the CONTRACTOR or its subcontractors from responsibility to perform all inspections and tests required by the Contract or governing codes and standards.

42. SUBCONTRACTED WORK

42.1 The CONTRACTOR shall not subcontract any portion of the work without the written approval of the NEK E&DC Responsible Engineer. Subcontractors performing safety related or augmented quality service will need to have either a by NEK approved quality assurance program or work in conjunction with the NEK Quality Assurance Program.

42.2 Based on the "Act on Ionizing Radiation Protection and Nuclear Safety" (ZVISJV) and "Rules on radiation and nuclear safety" (JV 5)” Article 67 (assessment of subcontractors and suppliers), NEK is responsible for establishing surveillance of the CONTRACTOR and its subcontractors to ensure high quality and nuclear safety for the public.

42.3 Contracted personnel working under CONTRACTOR's direct responsibility are not considered as subcontractors in this context.

42.4 All subcontractors shall be listed in the Bid. Any change of the selected subcontractors after contract award is subject to the NEK approval.

42.5 CONTRACTOR retains full responsibility for all aspects of subcontractors' performance (including quality and schedule) and shall ensure that all subcontractors meet the requirements of this specification.

42.6 The CONTRACTOR must engage qualified companies with a proven experience record of the Design Modification Packages development in accordance with the NEK procedures, as requested in the section 6.2 of this specification. Such qualified companies (subcontractors) shall ensure support during installation phase with response time less than eight (8) hours to ensure timely preparation and processing of the potential FDCRs (Field Design Change Requests) per NEK ESP-2.609 procedure. All qualified companies (subcontractors) shall have Quality Assurance program in place.

42.7 The CONTRACTOR shall ensure compliance with any applicable Quality Assurance and Quality Control requirements imposed by the NEK specifications for all subcontractors.

43. QUALITY ASSURANCE PROGRAM REQUIREMENTS

43.1 General

43.1.1 All equipment (NSR) delivered and services provided within the scope of this specification shall be performed in accordance with CONTRACTOR's quality management system, which shall comply to 10CFR50 Appendix B and relevant requirements from QA specifications NEK QS 610 "Generic Quality Assurance Program Requirements" and QS 600 "Quality Assurance Program Specification for Software". CONTRACTOR's QA manual shall be previously reviewed and accepted by NEK. All changes to the QA Manual shall be submitted and approved by NEK prior to the implementation.

43.1.2 The CONTRACTOR's QA program shall assure that all materials, manufacturing practices, examinations and testing conform to the requirements of this specification. One (1) copy of the CONTRACTOR's QA program manual shall be submitted to NEK with the Bid.

43.1.3 The CONTRACTOR has the responsibility for QA and QC activities for all Work pursuant to this specification. All technical and quality requirements shall be met. QA and QC activities by NEK shall not relieve the CONTRACTOR from the responsibility to perform all inspections and tests required by the contract or governing codes and standards.

43.1.4 All work performed by subcontractors shall be subjected to the technical and quality requirements of this specification as well. The CONTRACTOR shall be responsible for all subcontracted activities.

43.2 Project management manual (PMM)

43.2.1 The CONTRACTOR shall fill in and submit PMM provided in this specification as Appendix 2 for NEK review and final approval. The purpose of PMM is to confirm that the CONTRACTOR's project organization will be effectively organized and controlled to fulfill the following:

a) NEK configuration, design, documentation and QA program requirements.

b) NEK field installation and testing requirements.

c) NEK project management contractual requirements specified in this specification regarding organization, schedule compliance and progress reporting.

43.3 Project quality plan (PQP)

43.3.1 The CONTRACTOR shall prepare and submit PQP to NEK for review and approval according to the section 11.4 of this specification. PQP shall generally describe CONTRACTOR's QA-QC approach, including processing of non-conformances, reporting of deficiencies, corrective actions implementation, quality records management, etc.

43.3.2 PQP shall include test and inspection plan, i.e. QC plan for manufacturing and installation phases for the CONTRACTOR and each subcontractor of major parts. Manufacturing phase shall incorporate the design, and installation phase shall incorporate the transportation. Each QC plan shall indicate a logical sequence of the design activities, material acquisition, fabrication, installation, operation and testing activities, etc. with identified R (record), W (witness) and H (hold) points, separately for the CONTRACTOR and NEK.

43.3.3 The PQP shall also include plan for verification and validation activities (test and inspection plan) for software development lifecycle and shall include all applicable standards, procedures and instructions.

43.3.4 Each QC plan will be used as a traveler. Schedule plan with the test and inspection dates will be incorporated in the detailed schedule plans of the particular CONTRACTOR's or its subcontractors' phases.

43.3.5 Each QC plan shall include the following activities:

a) Tests and inspections at CONTRACTOR's or its subcontractors' facilities:

- tests of materials
- tests and inspections during design and manufacturing
- FAT
- inspections prior to the shipment

b) Tests and inspections on the NEK site:

- tests and inspections prior to assembly and installation of the equipment
- tests and inspections during assembling activities
- SAT
- test and inspections during commissioning

43.3.6 NEK will identify record (R), witness (W) and hold (H) points for each item in QC plan prior to the PQP approval. The PQP shall be approved before proceeding with any affected activity.

43.3.7 NEK shall be notified in writing at least ten (10) working days before any witness (W) or hold (H) point execution.

43.3.8 If there is a witness (W) or hold (H) point in the QC plan, and the acceptance criteria or test procedure is established according to the CONTRACTOR’s codes or standards, then codes, standards and test procedure must be shown to the NEK inspector at least three (3) days before the test or inspection execution. All provided documents must be in English, Slovenian or Croatian. All applicable CONTRACTOR’s codes and standard must be included in the Bid as specified in the section 7 of this specification.

43.4 Certificates of compliance

43.4.1 The CONTRACTOR shall submit a CoC to certify that provided equipment and services meet the requirements of this specification and the contract. Any deviation from the specification or repair of the equipment, which has been accepted by NEK in writing, shall not relieve the CONTRACTOR from its responsibility for satisfactorily performance according to this specification.

43.5 Quality records

43.5.1 A quality records system shall be established and maintained by the CONTRACTOR to provide documentary evidence of the quality of items and activities affecting quality according to the PQP. Quality records shall include results of reviews, inspections, test, audits, monitoring of work performance, material analysis, certificates, etc.

43.5.2 Quality records shall at a minimum identify NEK's name, order number, inspection and data record title, date of inspection, type of observation, results, acceptability and action taken with deficiencies noted. Record of inspection shall also identify drawings and procedures utilized along with the revision level.

43.5.3 Quality records shall be identifiable to the item or activity involved. Quality records shall be submitted to NEK as they originate or on request.

43.5.4 Final QRP document for each major project phase will be submitted to NEK as per section 11.10 of this specification.

43.6 Non-conformance reports

43.6.1 Any deviation or design change which is not fully in accordance with the technical or QA requirements of the contract, and which the CONTRACTOR desires to accept shall be documented as a non-conformance. Any such deviation if sensitive to NEK shall be made in writing for NEK approval prior to the disposition by means of issuing customer sensitive NCR.

43.6.2 Non-conformance with specification requirements or applicable codes and standards invoked by this specification will not be accepted until approved by NEK.

43.6.3 Non-conformances, which cannot be brought within specification requirements by rework or replacement, or non-conformance that impact product fit, function or existing NEK equipment interface, shall be considered as significant to NEK (i.e. customer sensitive) and therefore must be reported to NEK for approval.

43.6.4 When such a condition appears, CONTRACTOR shall issue an NCR using the CONTRACTOR's standard non-conformance process for documenting the non-conformance and proposing its disposition. Any mutually agreed document form can be used for NEK notification as far as the basic elements of the non-conformance process are applied (e.g. PDR form as per PMM).

43.6.5 The NCR shall provide the method by which the CONTRACTOR shall obtain a documented response and approval from NEK when customer sensitive non-conformance is identified. The use of NCR will pertain to the work at the CONTRACTOR’s and its subcontractors' shops.

43.6.6 Once the non-conformed item is identified as the customer sensitive NCR, that NCR shall remain assigned to that item permanently and NEK shall be advised of the originating NCR.

43.6.7 When the customer sensitive NCR is issued, the CONTRACTOR shall do the following:

a) Segregate the non-conformance item to prevent any further processing which may result in a change of the non-conformance as identified.

b) Make the NCR available to the responsible NEK inspector (if present) for review to ensure the non-conformance is completely identified and accurately stated.

c) Submit the NCR with recommended disposition to the NEK in an expeditious manner. The CONTRACTOR shall provide technical justification for the recommended dispositions.

43.6.8 The requirements of the specification are binding; no deviations are acceptable without the prior written consent by NEK. NEK shall either approve or reject the recommended disposition within the required time defined in PMM (e.g. according to the PDR classification). If there is no response from NEK within a specified time, the recommended disposition shall be considered as accepted by NEK and the non-conformance item processing shall continue.

43.7 Hold points for submittal of documentation

43.7.1 NEK shall have the right to establish record (R), witness (W) and hold (H) points according to the PQP and QC plan as specified in the section 43.3 of this specification. NEK shall establish additional hold points if necessary to ensure resolution of quality discrepancies.

44. NEK PROPRIETARY DATA

44.1 Information as such but not limited to all originals of engineering and related data, plans, maps, drawings, computer programs, and specification furnished in any form by NEK and related to the scope of work and supply under the contract shall remain NEK property. CONTRACTOR agrees not to use or release such information to any third party except for the purposes of performance of CONTRACTOR's obligations under this contract with prior written consent given by NEK. With respect to such information being disclosed to the CONTRACTOR's subcontractors, CONTRACTOR shall cause its subcontractors to execute such undertakings as necessary to give effect to this provision. CONTRACTOR shall give NEK a receipt for property furnished by NEK and shall be responsible for safekeeping and return to NEK upon request, upon termination of the contract, or upon termination of the services to which such property applies.

44.2 NEK has proprietary interest in all of the drawings, specifications, documents, information or know-how which may be furnished pursuant this contract execution, and in any know-how, improvement, discovery or invention which may be made, developed, or conceived in the performance of the work hereunder or which may arise or result therefrom (hereinafter collectively referred to as the "information"). All such information shall be considered to be proprietary to the NEK. The right to use such information shall be transmitted to the CONTRACTOR only for its personnel use and shall be entirely restricted to the performance of the contract and subject to the confidentiality provision.

45. APPENDIXES

Appendix 1 **Reference Drawings**

Appendix 2 **Project Management Manual (PMM) sample**

Appendix 3 **QS 600: Quality Assurance Program for Software**

Appendix 4 **QS 610: Quality specification QS 610 - Generic Quality Assurance Program Requirements**

Appendix 5 **Applicable Seismic Response Spectra**

Appendix 6 **Existing AMSAC cabinets' mechanical drawings**

NOTE: Reference drawings are provided as separate documents

1) NEK USAR Fig. 7.8-1/r7; AMSAC SYSTEM CONFIGURATION
2) NEK USAR Fig. 7.8-2/r7; ATWS MITIGATING SYSTEM ACTUATION CIRCUITRY 1/2
3) NEK USAR Fig. 7.8-2/r24; ATWS MITIGATING SYSTEM ACTUATION CIRCUITRY 2/2
4) B-208-016/Sh.00/r1; ELECTRICAL ELEMENTARY DIAGRAM AMSAC SYSTEM - INDEX
5) B-208-016/Sh.01/r3; ELECTRICAL ELEMENTARY DIAGRAM - AM- AMSAC SYSTEM - AMSAC ACTUATION TRAIN A
6) B-208-016/Sh.02/r3; ELECTRICAL ELEMENTARY DIAGRAM - AM-AMSAC SYSTEM - AMSAC ACTUATION TRAIN B
7) B-208-016/Sh.03/r3; ELECTRICAL ELEMENTARY DIAGRAM - AMSAC SYSTEM - AMSAC ALARMS AND STATUS LIGHTS
8) B-208-016/Sh.04/r0; ELECTRICAL ELEMENTARY DIAGRAM - AMSAC SYSTEM - AMSAC A INPUT POWER/NORMAL-BYPASS SWITCH
9) B-208-016/Sh.05/r0; ELECTRICAL ELEMENTARY DIAGRAM - AMSAC SYSTEM - AMSAC B INPUT POWER/NORMAL-BYPASS SWITCH
10) B-208-014/Sh.01/r28; MOTOR DRIVEN PUMP A (AF102PMP01A) 6.3kV SWG EE105SWGMD1 UNIT 3
11) B-208-014/Sh.02/r26; MOTOR DRIVEN PUMP B (AF102PMP02B) 6.3kV SWG EE105SWGMD2 UNIT 3
12) B-208-014/Sh.09/r18; TURBINE PUMP STEAM INLET ISOLATION VALVE 20000A
13) B-208-014/Sh.10/r20; TURBINE PUMP STEAM INLET ISOLATION VALVE 20000B
14) B-208-018/Sh.09/r23; SGBPS CONTAINMENT ISOLATION VALVE 1-7603A
15) B-208-018/Sh.10/r23; SGBPS CONTAINMENT ISOLATION VALVE 1-7603B
16) B-208-018/Sh.13/r11; SGBPS ISOLATION VALVE 1-7661B
17) B-208-018/Sh.14/r11; SGBPS ISOLATION VALVE 1-7661A
18) B-208-105/Sh.17/r10; MAIN STEAM SYSTEM - STEAM DUMP CONTROL SYSTEM
19) B-208-144/Sh.45/r10; TURBINE TRIP CHANNEL A
20) B-208-144/Sh.46/r10; TURBINE TRIP CHANNEL B
21) 7250D71/Sh.10/r10; STEAM DUMP CONTROL
22) 7250D71/Sh.14/r11; AUXILIARY FEEDWATER PUMPS STARTUP
23) 7250D71/Sh.15/r12; TURBINE TRIPS, RUNBACKS & OTHER SIGNALS
24) 7250D71/Sh.16/r6; AMSAC
25) 8798D02/Sh.7/r6; INTERCONNECTING WIRING DIAGRAM-CAB01 ESELRR01A
26) 8798D03/Sh.7/r6; INTERCONNECTING WIRING DIAGRAM-CAB02 ESELRR01B
27) 8798D04/Sh.11/r16; INTERCONNECTING WIRING DIAGRAM-CAB03 ESELRR01C
28) 8798D04/Sh.12/r14; INTERCONNECTING WIRING DIAGRAM-CAB03 ESELRR01C
29) 8798D05/Sh.10/r16; INTERCONNECTING WIRING DIAGRAM-CAB04 ESELRR01D
30) 8798D05/Sh.11/r14; INTERCONNECTING WIRING DIAGRAM-CAB04 ESELRR01D

NOTE: Project Management Manual (PMM) sample is provided as a separate document.

NOTE: QS 600; Quality Assurance Program for Software is provided as a separate document.

NOTE: QS 610: Quality specification QS 610 - Generic Quality Assurance Program Requirements is provided as a separate document.

SP-S702-044687-000

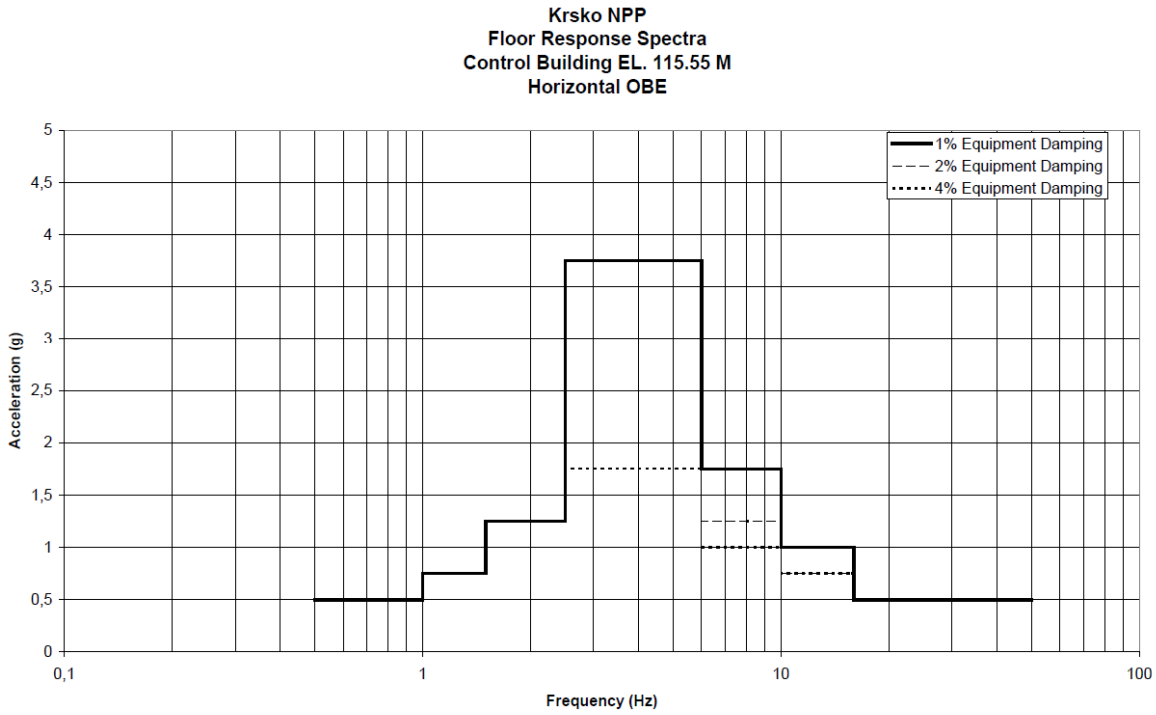

Appendix A Figure A77 Revision 10
October 2015

SP-S702-044687-000

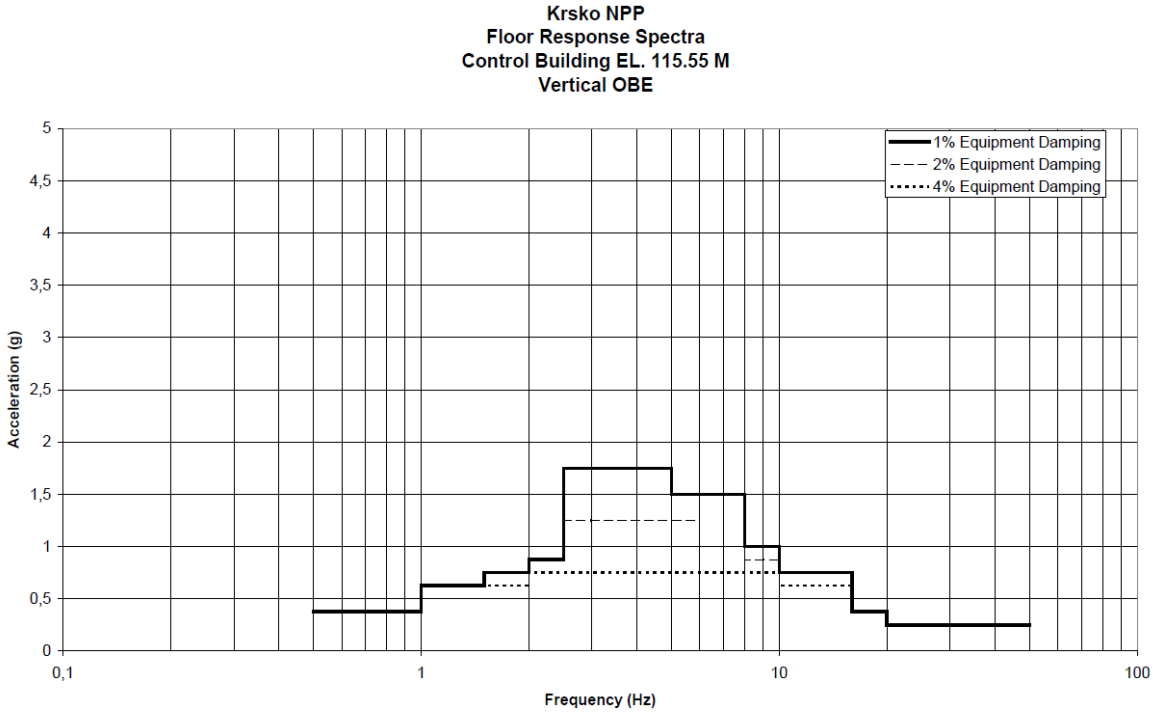

Appendix A Figure A78 Revision 10
October 2015

SP-S702-044687-000

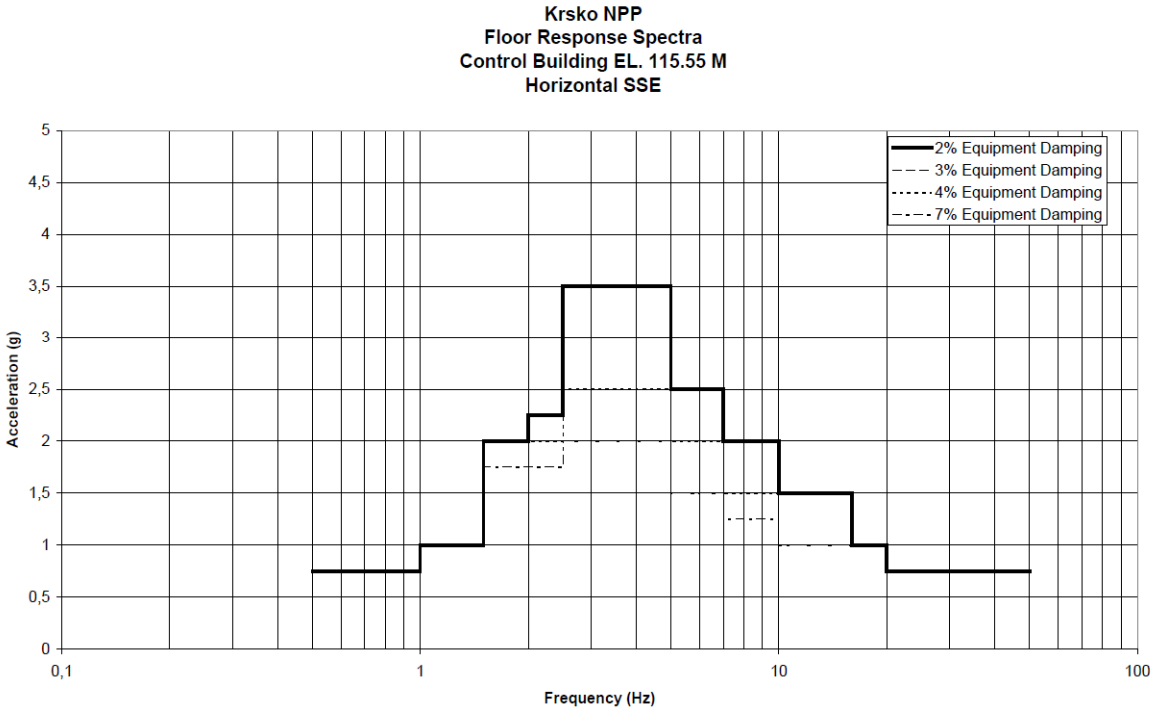

Appendix A Figure A79 Revision 10
October 2015

SP-S702-044687-000

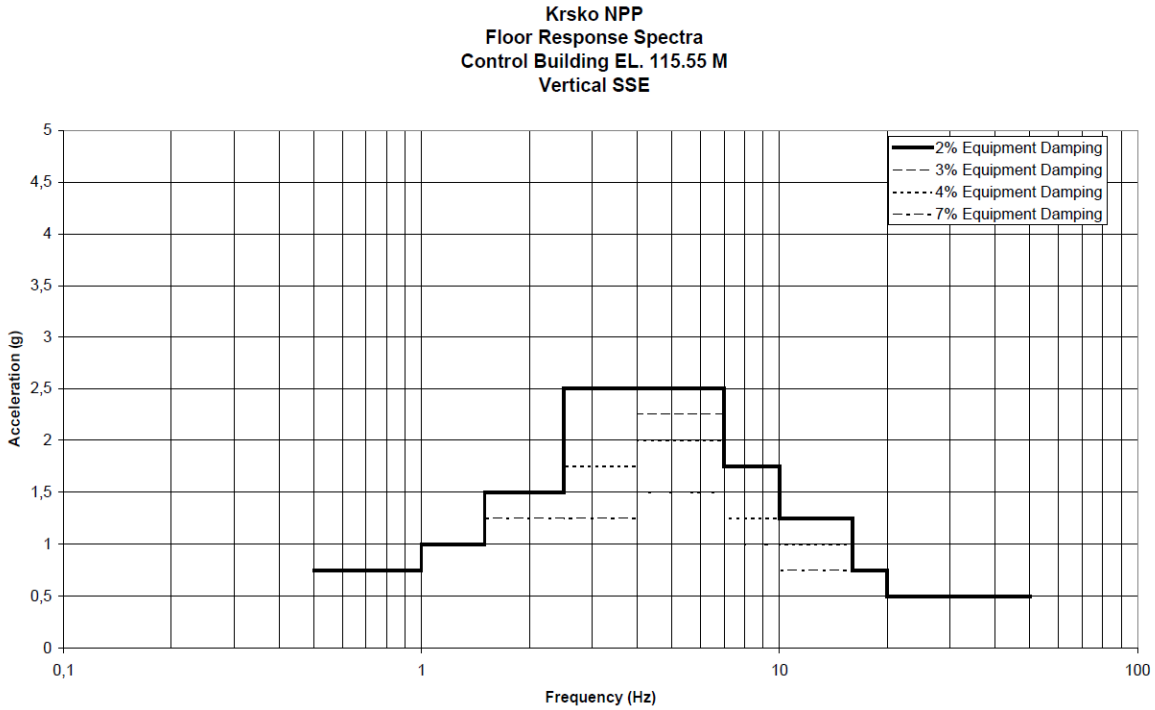

Appendix A Figure A80 Revision 10
October 2015

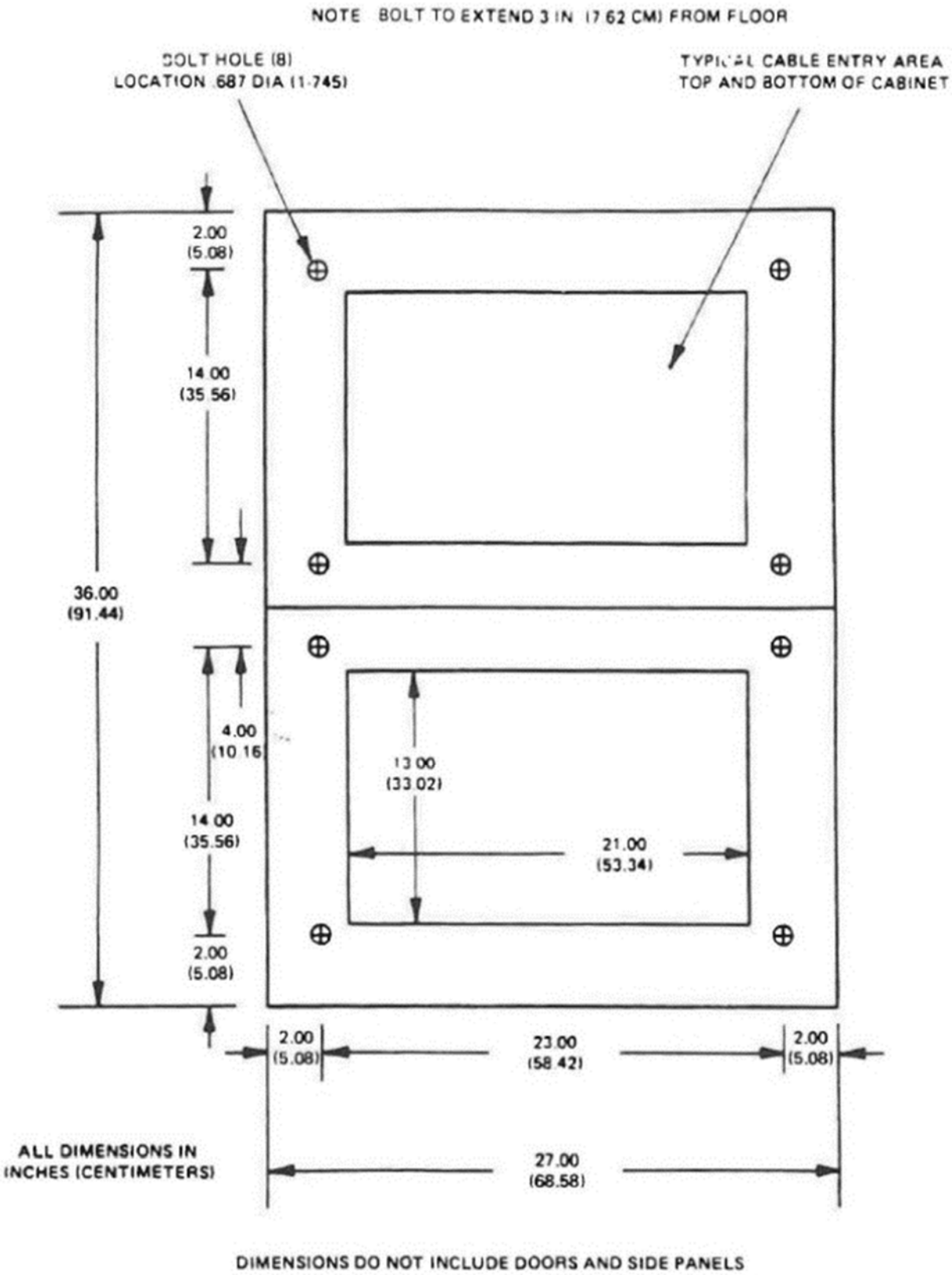
NOTE BOLT TO EXTEND 3 IN (7.62 CM) FROM FLOOR
BOLT HOLE (8)
LOCATION .687 DIA (1.745)
TYPICAL CABLE ENTRY AREA
TOP AND BOTTOM OF CABINET
2.00
(5.08)
14.00
(35.56)
36.00
(91.44)
4.00
(10.16)
13.00
(33.02)
21.00
(53.34)
14.00
(35.56)
2.00
(5.08)
2.00
(5.08)
23.00
(58.42)
2.00
(5.08)
ALL DIMENSIONS IN
INCHES (CENTIMETERS)
27.00
(68.58)
DIMENSIONS DO NOT INCLUDE DOORS AND SIDE PANELS

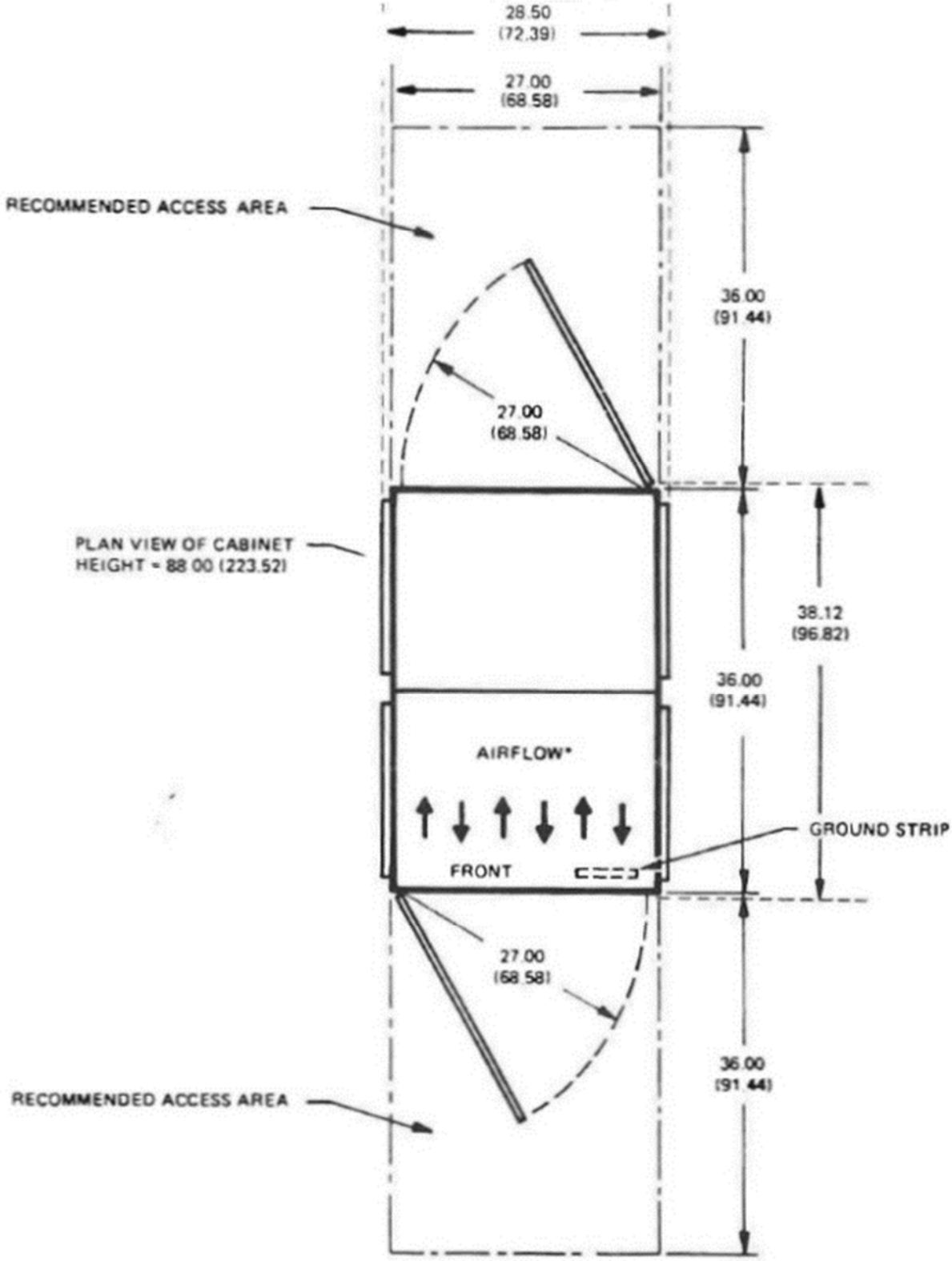

*AIR IS INPUT THROUGH THE BOTTOM VENT
AND EXHAUSTED FROM THE TOP VENT

ALL DIMENSIONS IN INCHES (CENTIMETERS)