ITEM NO.	QTY.	SIZE	DESCRIPTION	MATERIAL	REMARK
1	1	2" L=260mm	2" PIPE	A-312 TP304	
2	1	2"	PIPE CAP	A-182 F304	
3	6	70x50x5mm	PLATE	1.4301	
4	1	250x250x20mm	BASE PLATE	1.4301	
5	4	M12	ANCHOR BOLT (HILTI)	HST-R-M12x115 40/20	
4	1	400x150x10mm	BASE PLATE	1.4301	
5	1		ULTRASONIC WATER LEVEL SENSOR FMU40		PROSONIC

NON NUCLEAR SAFETY RELATED

NOTES:

1. ANCHORING TO THE CONCRETE FLOOR SHALL BE IN ACCORDANCE WITH THE REQUIREMENTS OF NEK SPECIFICATION SP-502 APPLYING NUCLEAR GRADE HILTI HST EXPANSION ANCHOR BOLTS.
2. ADJUST THE POSITION OF ANCHOR BOLTS WITHIN THE ANCHORING AREA(50X50mm). THE CUT OF REBARS IS NOT PERMITED. APPLY SCANNING FOR POSITIONING OF THE ANCHOR BOLTS. MOUNTING HOLES IN INSTRUMENT SUPPORT SHALL BE DRILLED AFTER CONCRETE DRILLING IN ORDER TO MATCH THE ACTUAL ANCHOR BOLTS POSITION.
3. INSTALLATION COMPANY SHALL CONTACT DESIGNER FOR RESOLVING ANY FIELD INTERFERENCE OR OTHER INSTALLATION ISSUE.
4. ALL MEASURES ARE IN MM.
5. TOLERANCE AND MACHINE NOTES: TOLERANCES (NO DECIMAL ±2 MM), (DECIMAL AND WELDS ±0.2 MM). MAXIMUM SURFACE ROUGHNESS 6.3 microm Ra.

Welding requirements:

- The welds shall be corrosion protected by qualified coating per NEK specification SP-A503.

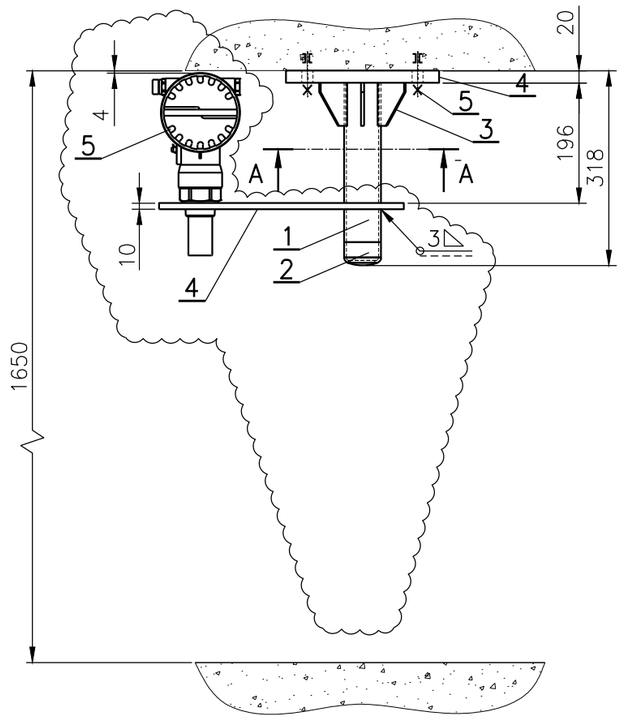

FRONT VIEW

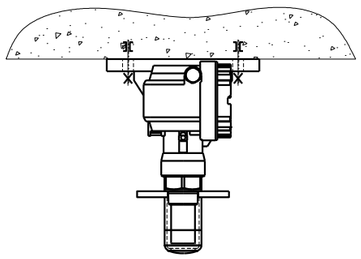

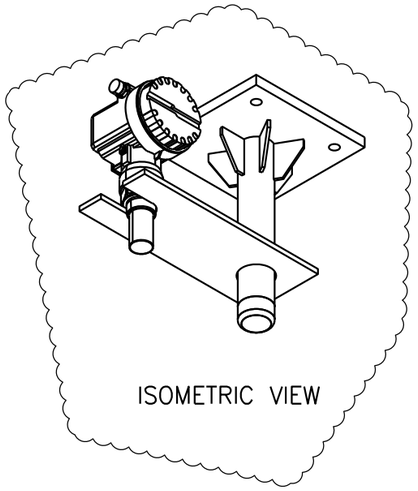

ISOMETRIC VIEW

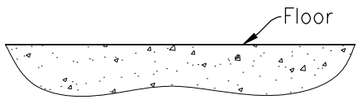

SIDE VIEW

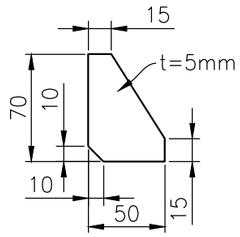

ITEM No.6

TABLE I
LT9722

1. Interim Dwg. No.: SIP-367-814-008-0-IA
   Interim Sketch No.: N/A
2. Design Mod. No.: ZKP 2024-1061
3. Drawing Rev. No.: 0
4. New Drawing No.: N/A
5. Resp. Eng.: T. BROMŠE Date: 18.07.2025
6. Checker: R. MLAKAR Date: 18.07.2025

ZKP 2024-1061

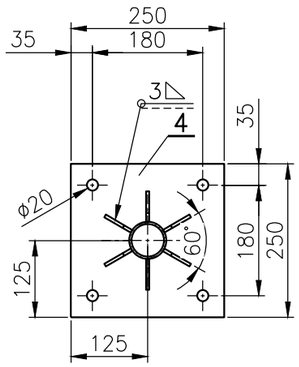

SECTION A-A

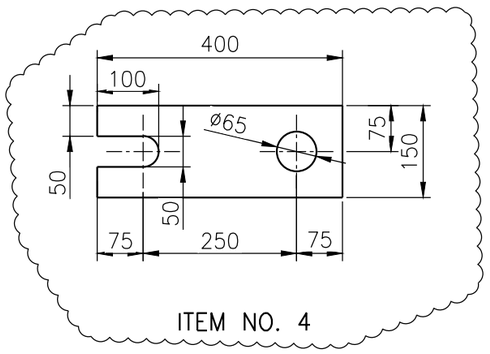

ITEM NO. 4

NO.	DATE	BY	REVISION	CKD. BY	LE APPR.
0	11.2021	K.Š.	ISSUED PER MOD. 1056-NA-L, FDCR 16	R.P.	R.P.

Customer: NUCLEAR POWER PLANT KRŠKO

	MADE	CHKD.	APPROVALS	ENG. INT. CHK.
SIGN	K. ŠTERK	R. PETAN	R. PLANINC	
DATE	11.2021	11.2021	11.2021	

Designer: SIPRO INŽENIRING CKŽ 135c SI-8270 KRŠKO

SUPPORT FOR LT9722

DWG.NO. SIP-367-814-008 SH: - REV 0

FILE: SIP-367-814-008-IA.dwg, SPREJEL: